KE-430HX
KE-430HS
BE-438HX
BE-438HS

INSTRUCTION
MANUAL

Please read this manual before using the machine.
Please keep this manual within easy reach for quick reference.

ELECTRONIC DIRECT DRIVE LOCKSTITCH BAR TACKER

ELECTRONIC DIRECT DRIVE LOCKSTITCH BUTTON SEWER

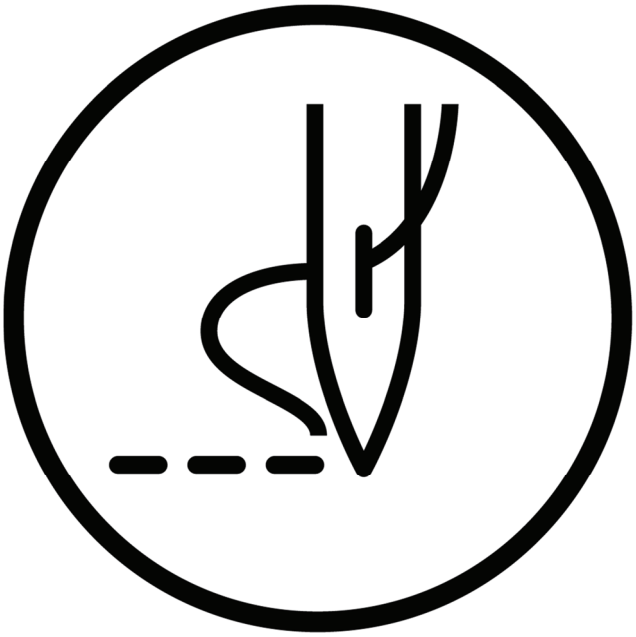

brother

Thank you very much for buying a BROTHER sewing machine. Before using your new machine, please read the safety instructions and the explanations given in the instruction manual.

With industrial sewing machines, it is normal to carry out work while positioned directly in front of moving parts such as the needle and thread take-up, and consequently there is always a danger of injury that can be caused by these parts. Follow the instructions from training personnel and instructors regarding safe and correct operation before operating the machine so that you will know how to use it correctly.

SAFETY INSTRUCTIONS

[1] Safety indications and their meanings

This instruction manual and the indications and symbols that are used on the machine itself are provided in order to ensure safe operation of this machine and to prevent accidents and injury to yourself or other people.
The meanings of these indications and symbols are given below.

Indications

⚠ **DANGER**	The instructions which follow this term indicate situations where failure to follow the instructions will result in death or serious injury.
⚠ **WARNING**	The instructions which follow this term indicate situations where failure to follow the instructions could result in death or serious injury.
⚠ **CAUTION**	The instructions which follow this term indicate situations where failure to follow the instructions may result in minor or moderate injury.

Symbols

. . . . . This symbol (△) indicates something that you should be careful of. The picture inside the triangle indicates the nature of the caution that must be taken.
(For example, the symbol at left means “beware of injury”.)

. . . . . This symbol (⃠) indicates something that you must not do.

. . . . . This symbol (●) indicates something that you must do. The picture inside the circle indicates the nature of the thing that must be done.
(For example, the symbol at left means “you must make the ground connection”.)

[2] Notes on safety

DANGER

Wait at least 5 minutes after turning off the power switch and disconnecting the power cord from the wall outlet before opening the cover of the control box. Touching areas where high voltages are present can result in severe injury.

WARNING

Do not allow any liquids to get onto this sewing machine, otherwise fire, electric shocks or operating problems may occur.

If any liquid gets inside the sewing machine (machine head or control box), immediately turn off the power and disconnect the power plug from the electrical outlet, and then contact the place of purchase or a qualified technician.

CAUTION

Environmental requirements

Use the sewing machine in an area which is free from sources of strong electrical noise such as electrical line noise or static electric noise.
Sources of strong electrical noise may cause problems with correct operation.

Any fluctuations in the power supply voltage should be within ±10% of the rated voltage for the machine.
Voltage fluctuations which are greater than this may cause problems with correct operation.

The power supply capacity should be greater than the requirements for the sewing machine's power consumption.
Insufficient power supply capacity may cause problems with correct operation.

The ambient temperature should be within the range of 5°C to 35°C during use.
Temperatures which are lower or higher than this may cause problems with correct operation.

The relative humidity should be within the range of 45% to 85% during use, and no dew formation should occur in any devices.
Excessively dry or humid environments and dew formation may cause problems with correct operation.

In the event of an electrical storm, turn off the power and disconnect the power cord from the wall outlet.
Lightning may cause problems with correct operation.

Do not connect anything to the USB port other than the USB memory. If this is not observed, problems with operation may result.

Installation

Machine installation should only be carried out by a qualified technician.

Contact your Brother dealer or a qualified electrician for any electrical work that may need to be done.

The sewing machine weighs approximately 60 kg (132lb). The installation should be carried out by two or more people.

Do not connect the power cord until installation is complete. The machine may operate if the foot switch is depressed by mistake, which could result in injury.

Turn off the power switch before inserting or removing the plug, otherwise damage to the control box could result.

Be sure to connect the ground. If the ground connection is not secure, you run a high risk of receiving a serious electric shock, and problems with correct operation may also occur.

When securing the cords, do not bend the cords excessively or fasten them too hard with staples, otherwise there is the danger that fire or electric shocks could occur.

If using a work table which has casters, the casters should be secured in such a way so that they cannot move.

Secure the table so that it will not move when tilting back the machine head. If the table moves, it may crush your feet or cause other injuries.

Use both hands to hold the machine head when tilting it back or returning it to its original position. If only one hand is used, the weight of the machine head may cause your hand to slip, and your hand may get caught.

Be sure to wear protective goggles and gloves when handling the lubricating oil and grease, so that they do not get into your eyes or onto your skin, otherwise inflammation can result.
Furthermore, do not drink the oil or eat the grease under any circumstances, as they can cause vomiting and diarrhea.
Keep the oil out of the reach of children.

⚠ CAUTION

Lubrication

Turn off the power switch before carrying out work.
The machine may operate if the foot switch is depressed by mistake, which could result in injury.

Be sure to wear protective goggles and gloves when handling the lubricating oil, so that it does not get into your eyes or onto your skin.
If care is not taken, inflammation can result. Furthermore, do not drink the lubricating oil. Diarrhea or vomiting may result.
Keep the oil out of the reach of children.

When cutting the nozzle of the oil tank, hold the base of the nozzle securely.
If you hold the end of the nozzle, injury from the scissors may result.

Sewing

To prevent problems, do not use objects with sharp points to operate the operation panel.

This sewing machine should only be used by operators who have received the necessary training in safe use beforehand.

The sewing machine should not be used for any applications other than sewing.

Be sure to wear protective goggles when using the machine.
If goggles are not worn, there is the danger that if a needle breaks, parts of the broken needle may enter your eyes and injury may result.

Turn off the power switch at the following times.
The machine may operate if the foot switch is depressed by mistake, which could result in injury.

- When replacing the bobbin and needle
- When not using the machine and when leaving the machine unattended

Use threading mode or turn off the power first in order to carry out threading.

If using a work table which has casters, the casters should be secured in such a way so that they cannot move.

Attach all safety devices before using the sewing machine. If the machine is used without these devices attached, injury may result.

Do not touch any of the moving parts or press any objects against the machine while sewing, as this may result in personal injury or damage to the machine.

Secure the table so that it will not move when tilting back the machine head. If the table moves, it may crush your feet or cause other injuries.

Use both hands to hold the machine head when tilting it back or returning it to its original position. If only one hand is used, the weight of the machine head may cause your hand to slip, and your hand may get caught.

If an error occurs in machine operation, or if abnormal noises or smells are noticed, immediately turn off the power switch. Then contact your nearest Brother dealer or a qualified technician.

If the machine develops a problem, contact your nearest Brother dealer or a qualified technician.

Cleaning

Turn off the power switch before carrying out cleaning. The machine may operate if the foot switch is depressed by mistake, which could result in injury.

Secure the table so that it will not move when tilting back the machine head. If the table moves, it may crush your feet or cause other injuries.

Use both hands to hold the machine head when tilting it back or returning it to its original position. If only one hand is used, the weight of the machine head may cause your hand to slip, and your hand may get caught.

Be sure to wear protective goggles and gloves when handling the lubricating oil and grease, so that they do not get into your eyes or onto your skin, otherwise inflammation can result.
Furthermore, do not drink the oil or eat the grease under any circumstances, as they can cause vomiting and diarrhea.
Keep the oil out of the reach of children.

⚠ CAUTION

Maintenance and inspection

Maintenance and inspection of the sewing machine should only be carried out by a qualified technician.

Ask your Brother dealer or a qualified electrician to carry out any maintenance and inspection of the electrical system.

Turn off the power switch and disconnect the power cord from the wall outlet at the following times, otherwise the machine may operate if the foot switch is depressed by mistake, which could result in injury.

- When carrying out inspection, adjustment and maintenance
- When replacing consumable parts such as the hook and knife

Always be sure to turn off the power switch and then wait one minute before opening the rear cover. If you touch the surface of the motor, it may cause burns.

If the power switch needs to be left on when carrying out some adjustment, be extremely careful to observe all safety precautions.

Secure the table so that it will not move when tilting back the machine head. If the table moves, it may crush your feet or cause other injuries.

Use both hands to hold the machine head when tilting it back or returning it to its original position.
If only one hand is used, the weight of the machine head may cause your hand to slip, and your hand may get caught.

When replacing parts and installing optional accessories, be sure to use only genuine Brother parts.
Brother will not be held responsible for any accidents or problems resulting from the use of non-genuine parts.

If any safety devices have been removed, be absolutely sure to re-install them to their original positions and check that they operate correctly before using the machine.

To prevent accidents and problems, do not modify the machine yourself.
Brother will not be held responsible for any accidents or problems resulting from modifications made to the machine.

[3] Warning labels

The following warning labels appear on the sewing machine.
Please follow the instructions on the labels at all times when using the machine. If the labels have been removed or are difficult to read, please contact your nearest Brother dealer.

1

	⚠ 危 険		⚠ 危 险
	高電圧部分にふれて、大けがをすることがある。 電源を切り、５分たってからカバーをはずすこと。		触摸高电压部分，会导致受伤。 在切断电源 5 分钟后，再开启盖罩。
⚠ DANGER	⚠ GEFAHR	⚠ DANGER	⚠ PERIGRO
Hazardous voltage will cause injury. Turn off main switch and wait 5minutes before opening this cover.	Hochspannung verletzungsgefahr! Bitte schalten sie den hauptschalter aus und warten sie 5 minuten, bevor sie diese abdeckung öffnen.	Un voltage non adapte provoque des blessures. Eteindre l'interrupteur et attendre 5 minutes avantd'ouvrir le capot.	Un voltaje inadecuado puede provocar las heridas. Apagar el interruptor principal y esperar 5 minutos antes de abrir esta cubierta.

2

Touching areas where high voltages are present can result in severe injury.
Turn off the power before removing the cover.

3

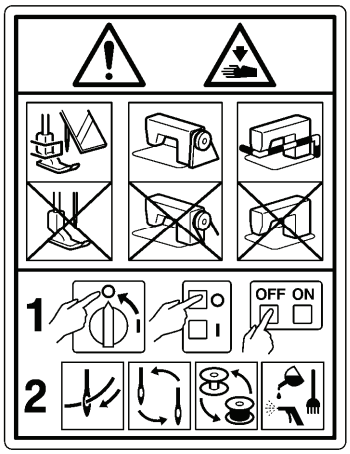

CAUTION
Moving parts may cause injury.

Operate with safety devices* installed.

Turn off the power before carrying out operations such as threading, changing the needle, bobbin, knives or hook, cleaning and adjusting.

* Safety devices
Eye guard, Finger guard,
DT solenoid cover, Thread take-up cover,
Side cover , Rear cover, etc.

4

Be careful to avoid injury from the moving thread take-up.

5

Be careful not to get your hands caught when returning the machine head to its original position after it has been tilted.

6

Be sure to connect the ground. If the ground connection is not secure, you run a high risk of receiving a serious electric shock, and problems with correct operation may also occur.

7

Direction of operation

8

Do not hold, otherwise problems with operation or injury may occur.

9

(KE-430HX only)
Do not hold this part when tilting the machine head back, otherwise problems with operation or injury may occur.

10

High temperature warning display

11

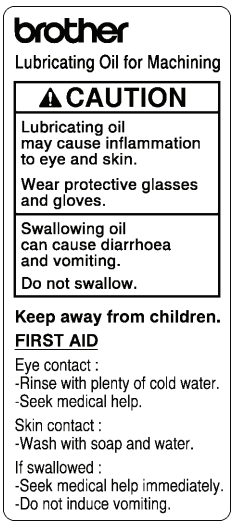

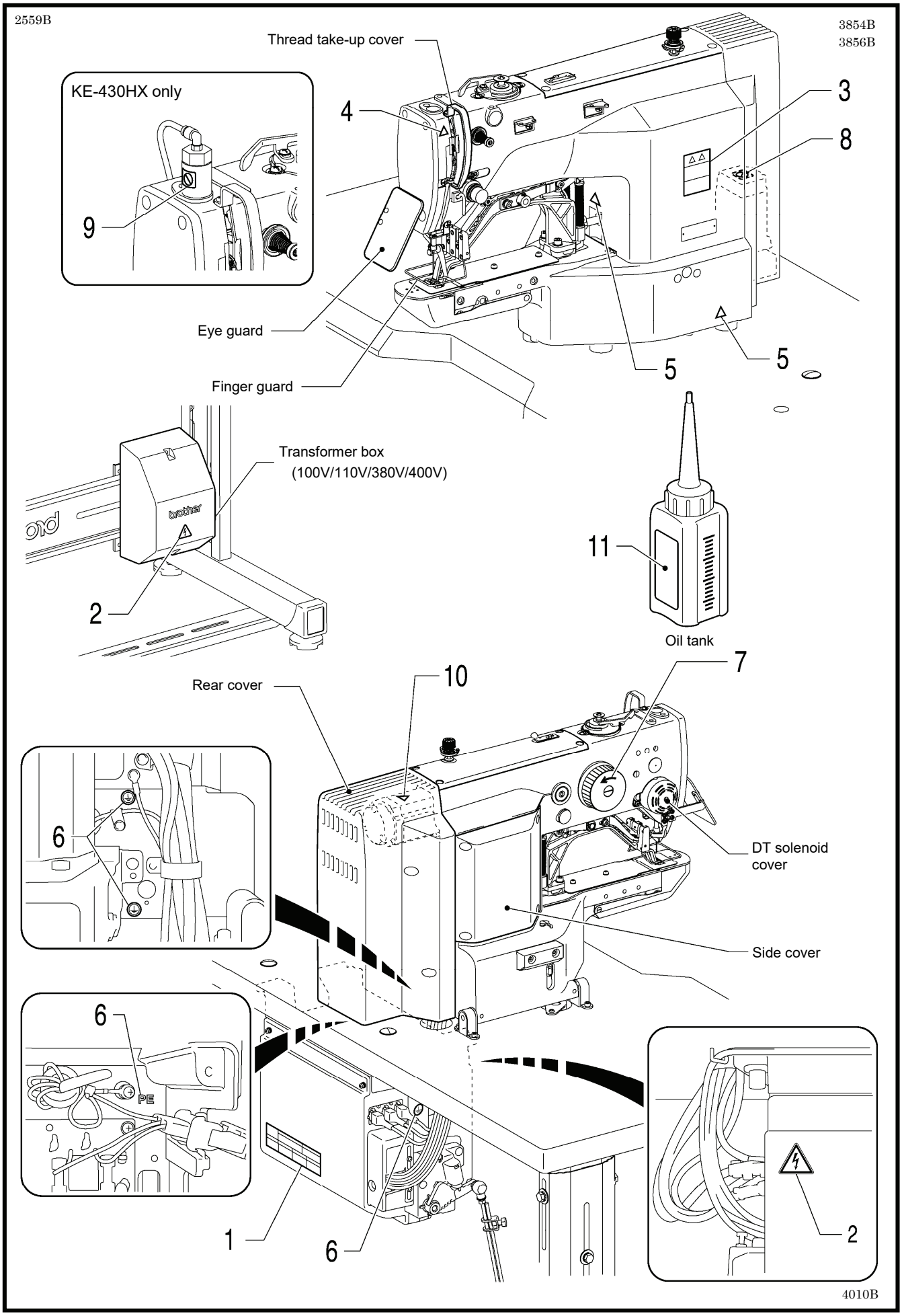
2559B
3854B
3856B
Thread take-up cover
KE-430HX only
4
3
8
9
Eye guard
Finger guard
5
5
Transformer box
(100V/110V/380V/400V)
brother
2
11
Oil tank
Rear cover
10
7
6
DT solenoid
cover
Side cover
6
PE
1
6
2
4010B

CONTENTS

1. NAMES OF MAJOR PARTS 1

2. SPECIFICATIONS 2

2-1. Machine specifications 2
2-2. List of sewing patterns (KE-430HX/HS) 4
2-3. List of sewing patterns (BE-438HX/HS) 9

3. INSTALLATION 12

3-1. Table processing diagram 13
3-2. Installing the control box..... 14
3-3. Installing the oiler..... 14
3-4. Installing the machine head..... 15
3-5. Installing the operation panel 17
3-6. Installing the cotton stand..... 18
3-7. Installing the button tray (BE-438HX/HS)..... 18
3-8. Installing the eye guard 19
3-9. Installing the needle cooling equipment (KE-430HX) 20
3-10. Connecting the cords..... 21
3-11. Connecting the ground wire 24
3-12. Installing the rear cover 25
3-13. Lubrication 26
3-14. Connecting the power cord 27
3-15. Checking the machine head switch..... 30
3-16. Starting up 30

4. PREPARATION BEFORE SEWING.....31

4-1. Installing the needle..... 31
4-2. Winding the lower thread..... 31
4-3. Installing the bobbin case..... 33
4-4. Threading the upper thread..... 34
4-5. Thread tension..... 35
4-5-1. Lower thread tension 35
4-5-2. Upper thread tension 36
4-6. Adjusting the needle cooling equipment (KE-430HX) 37
4-7. Thread nipper device (KE-430HX-03, -0K, -01) 38
4-8. Inserting a button (BE-438HX/HS) 40
4-9. Adjusting the button clamp (BE-438HX/HS)... 40
4-10. About the button lifting method (BE-438HX/HS).....41
4-10-1. Selecting the button clamp spacer.....41
4-10-2. Installing the button lifter spring 41

5. USING THE OPERATION PANEL (BASIC OPERATIONS) 42

5-1. Name and function of each operation panel item 42
5-2. Home screen.....44
5-3. Program selection method 45
5-4. X scale and Y scale setting method.....46
5-5. Sewing speed setting method.....48
5-6. Work clamp height setting method 49
5-7. User program setting method 50
5-8. Slow start pattern setting method 54
5-9. Copying programs (Additional program).....55
5-10. Checking the sewing pattern (KE-430HX/HS).....56
5-11. Checking the sewing pattern (BE-438HX/HS).....57
5-12. Correcting the upper thread tension (For KE-430HX and BE-438HX) 58
5-13. Illumination LED setting method 59

6. USING THE OPERATION PANEL (ADVANCED OPERATIONS) 60

6-1. Setting memory switches 60
6-2. List of memory switches.....62
6-3. Using the lower thread counter 64
6-4. Using the production counter 65
6-5. Using the garment counter.....66
6-6. Using cycle programs 67
6-7. Direct selection 69
6-8. Reading and writing data using USB memory.....70
6-9. Data initialization method.....71

7. SEWING 72

7-1. Sewing 72
7-2. Changing sewing conditions 73

8. MAINTENANCE.....74

8-1. Cleaning the hook.....74
8-2. Draining the oil.....75
8-3. Cleaning the eye guard 75
8-4. Checking the needle.....75
8-5. Lubrication 75
8-6. Applying grease
(Work clamp: KE-430HX/HS) 76
8-7. Cleaning the needle cooling equipment
(KE-430HX) 76
8-8. Changing lubricating oil (When the oil
change warning is displayed).....77

9. STANDARD ADJUSTMENT.....81

9-1. Standard thread tension 81
9-1-1. Upper and lower thread tension.....81
9-1-2. Thread take-up spring.....82
9-1-3. Arm thread guide C 83
9-1-4. Needle bar bush thread guide D 83
9-2. Adjusting the needle bar height.....83
9-3. Adjusting the needle bar lift amount and the
driver needle guard.....84
9-4. Adjusting the needle clearance 84
9-5. Adjusting the shuttle race thread guide 85
9-6. Hook lubrication amount.....85
9-7. Replacing the movable knife and fixed knife..86
9-8. Adjusting the work clamp lift amount
(KE-430HX/HS) 87
9-9. Adjusting the button clamp lift amount
(BE-438HX/HS) 87
9-10. Adjusting the holding pressure
(BE-438HX/HS) 88
9-11. Adjusting the position of the button clamp
(BE-438HX/HS) 88
9-12. Adjusting the thread wiper.....88
9-13. Checking the machine head switch.....89

10. TABLE OF ERROR CODES.....90

11. TROUBLESHOOTING.....95

1. NAMES OF MAJOR PARTS

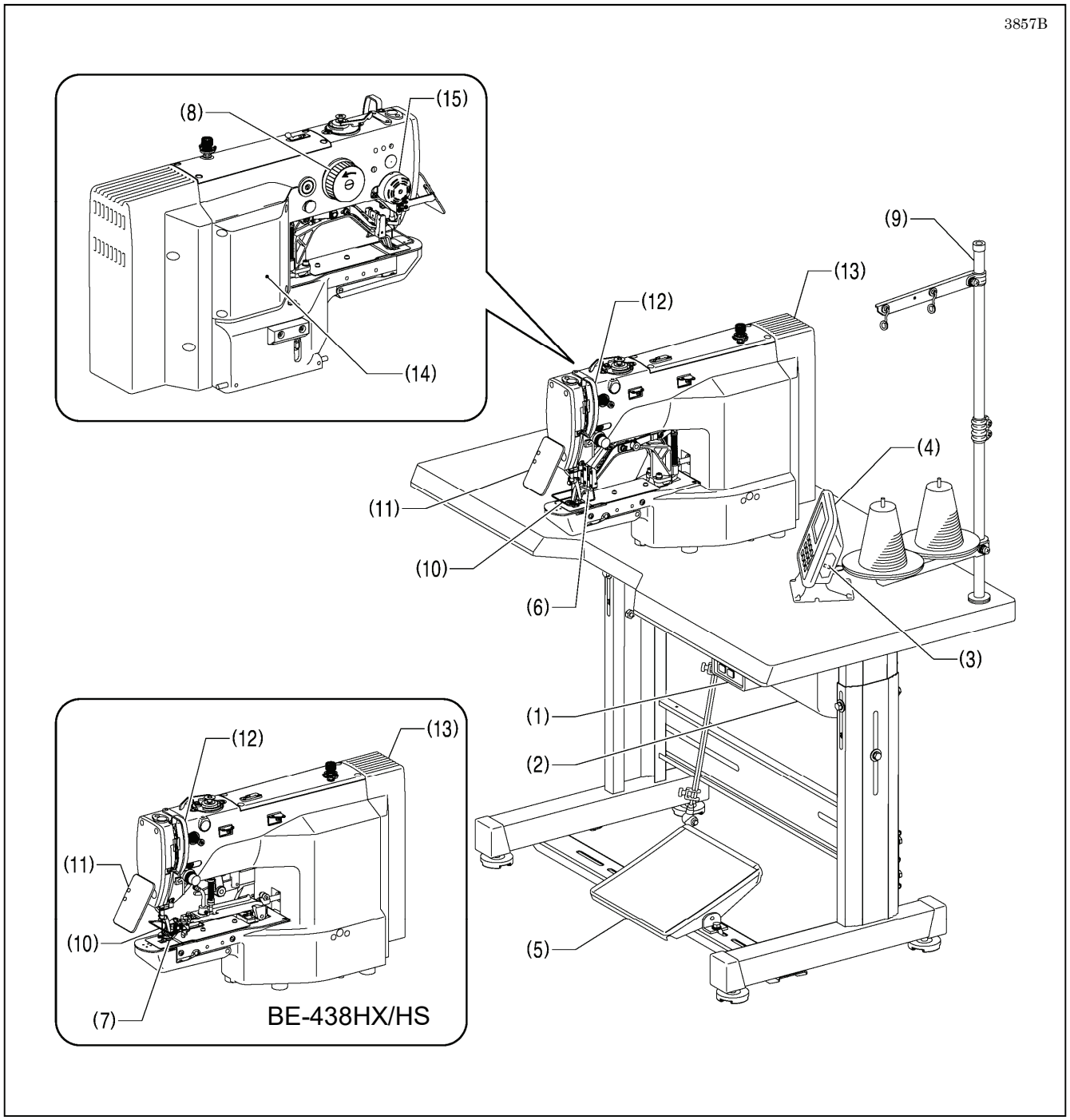

(1) Power switch
(2) Control box
(3) USB port
(4) Operation panel
(5) Foot switch
(6) Work clamp (KE-430HX/HS)
(7) Button clamp (BE-438HX/HS)
(8) Pulley
(9) Cotton stand

Safety devices
(10) Finger guard
(11) Eye guard
(12) Thread take-up cover
(13) Rear cover
(14) Side cover
(15) DT solenoid cover

2. SPECIFICATIONS

2-1. Machine specifications

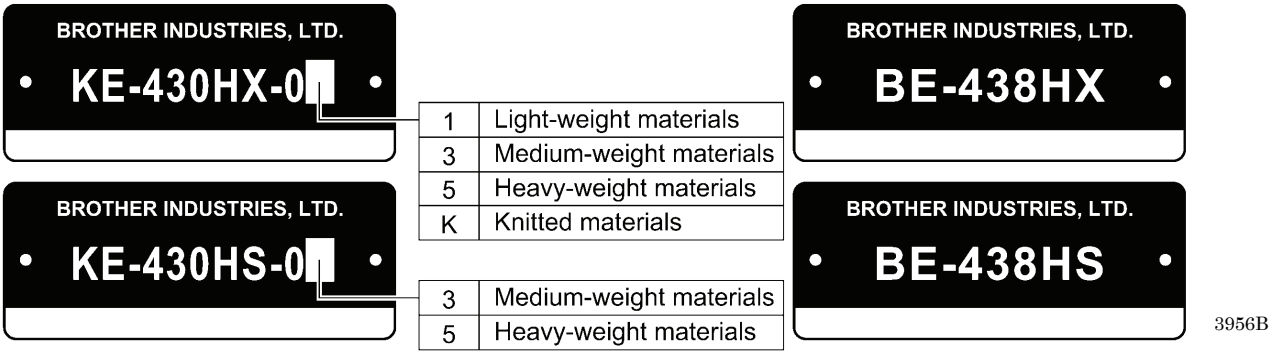

	KE-430HX	KE-430HS	BE-438HX	BE-438HS
	Electronic direct drive lockstitch bar tacker		Electronic direct drive lockstitch button sewer	
Stitch formation	Single needle lock stitch			
Maximum sewing speed	3,300 sti/min (*1)		2,800 sti/min	
Pattern size (X x Y)	50 x 40 mm max. (*2)		6.4 x 6.4 mm max.	
Dimensions of buttons that can be sewn			Outer diameter of button 8 - 30 mm (*3)	
Feed mechanism	Y-θ intermittent feed mechanism (pulse-motor driven mechanism)			
Stitch length	0.05 - 12.7 mm		0.05 – 6.4 mm	
Number of stitches	Refer to “List of sewing patterns” for the number of stitches in sewing patterns which have already been entered.			
Maximum stitch number	Approx. 5,000 stitches (1 pattern)			
Work clamp lifter	Pulse-motor driven mechanism			
Work clamp height Button clamp height	17 mm max.		13 mm max.	
Hook	Shuttle hook (double shuttle hook, optional)		Shuttle hook	
Lubrication method	Semi dry	Minimum lubrication	Semi dry	Minimum lubrication
Digital tension set	Standard equipment		Standard equipment	
Thread wiper device	Standard equipment			
Thread trimmer device	Standard equipment			
Thread nipper device	-03, -0K, -01 specifications: Standard equipment; -05 specifications: Option	-03, -05 specifications: option	Option	
Illumination LED	Standard equipment			
Data storage method	Flash memory (Any sewing pattern can be added using USB memory)			
Data recording media	USB memory (*4)			
Number of cycle programs	Up to 30 can be registered (up to 50 steps each)			
Number of stored data	89 sewing patterns are set already		64 sewing patterns are set already	
	(Up to a maximum of 500 additional types of sewing patterns. Total number of stitches of stored data which can be added is within 500,000.) (*5)			
Motor	AC servo motor 550 W			
Weights	Machine head: approx. 60 kg, Operation panel: approx. 0.4 kg Control box: approx. 7 kg			
Power source	100V, 110V, 200V - 230V, 380V - 400V * The voltages which can be used and the available regions may vary depending on the specifications.			
Power consumption	450 VA			

*1 Reduce the maximum sewing speed in accordance with the sewing conditions.
The maximum sewing speed for additional sewing patterns with 66 stitches or more is 2,800 sti/min.
When using the double shuttle hook, use a sewing speed of 2,700 sti/min or less.

*2 Use the optional 50 X 40 sewing area set (other than for Europe: SB7777-001, for Europe: SB7777-0E1) for a sewing area of 50 x 40 mm.
The normal sewing area size is 40x30.

*3 Use the optional button clamp L (SA9303-201) for diameters of 20 mm or greater.

*4 No guarantees of operation can be given for any media.

*5 The number of sewing patterns and the number of stitches that can be recorded will vary depending on the number of stitches in each sewing pattern.

*6 If using a shank button, use the shank device (other than for Europe: SB7900-001, for Europe: SB7900-0E1).

2-2. List of sewing patterns (KE-430HX/HS)

The sewing patterns shown below have been preset into the sewing machine and can be selected according to specifications.
(Any sewing pattern is available as long as it is within the work clamp and feed plate in size.)
Use the work clamp and feed plate that match the respective sewing pattern selected.
The sewing size is the length when the enlargement/reduction ratio is 100%.

For medium-weight materials (-03)

No.	Pattern	No. of stitches	Tacking size (mm)		No.	Pattern	No. of stitches	Tacking size (mm)	
			Length	Width				Length	Width
1		42	16	2	65		43	16	2
4	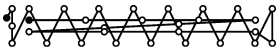	31	16	2	66		32	16	2
5		29	10	2	67		30	10	2
8		21	7	2	68		22	7	2
13		35	10	2	69		36	10	2
15	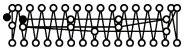	42	10	2	70		43	10	2
20	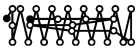	28	7	2	71		29	7	2
21	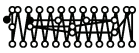	35	7	2	72		36	7	2
64	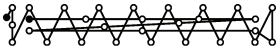	30	16	2	89	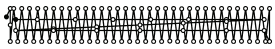	90	24	3

For heavy-weight materials (-05)

No.	Pattern	No. of stitches	Tacking size (mm)		No.	Pattern	No. of stitches	Tacking size (mm)	
			Length	Width				Length	Width
2		42	20	3	18	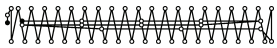	56	24	3
3		35	20	3	19	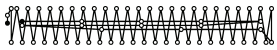	64	24	3
6		30	16	3	62		42	20	3
14		35	16	3	63	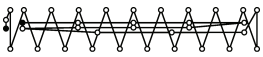	35	20	3
16		43	16	3	78	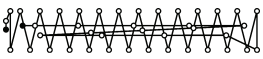	43	20	3
17	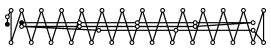	42	24	3	79		36	20	3

For heavy-weight materials (-05)									
No.	Pattern	No. of stitches	Tacking size (mm)		No.	Pattern	No. of stitches	Tacking size (mm)	
			Length	Width				Length	Width
80		31	16	3	83		43	24	3
81		36	16	3	84		57	24	3
82		44	16	3	85		65	24	3

For knitted materials (-0K) and light-weight materials (-01)									
No.	Pattern	No. of stitches	Tacking size (mm)		No.	Pattern	No. of stitches	Tacking size (mm)	
			Length	Width				Length	Width
7		28	8	2	73		29	8	2
9		21	7	2	74		22	7	2
22		14	7	2	75		15	7	2
31*		28	8	2	76*		29	8	2
32*		22	8	2	77*		23	8	2
33*		15	8	2					

* The sewing start and sewing end are in the middle of the pattern.

Straight bar tacking					Vertical zigzag stitching				
No.	Pattern	No. of stitches	Tacking size (mm)		No.	Pattern	No. of stitches	Tacking size (mm)	
			Length	Width				Length	Width
10		21	10	0.3	44		46	9	15
11		28	10	0.3					
12		28	20	0.3	45		70	9	25
23		35	25	0.3					
24		42	25	0.3					
25		45	25	0.3					

Vertical bar tacking					Vertical straight bar tacking				
No.	Pattern	No. of stitches	Tacking size (mm)		No.	Pattern	No. of stitches	Tacking size (mm)	
			Length	Width				Length	Width
26		28	3	10	28		19	0.3	10
27		35	3	10	29		21	0.3	10
40		32	3	16	30		28	0.3	10
41		36	3	16	46		27	0.3	20
42		44	3	20	47		44	0.3	25
43		68	3	24					

Crescent bar tacking									
No.	Pattern	No. of stitches	Tacking size (mm)		No.	Pattern	No. of stitches	Tacking size (mm)	
			Length	Width				Length	Width
34	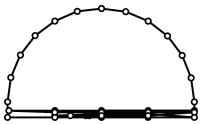	35	12	7	37	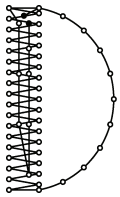	57	7	12
35	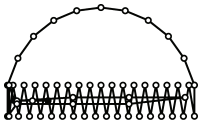	58	12	7	38	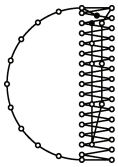	53	7	10
36	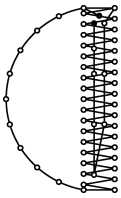	57	7	12	39	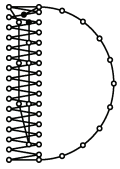	53	7	10

Crossed stitching					Crossed tacking				
No.	Pattern	No. of stitches	Tacking size (mm)		No.	Pattern	No. of stitches	Tacking size (mm)	
			Length	Width				Length	Width
48	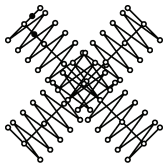	70	10	10	50	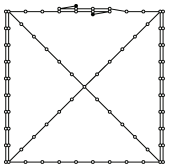	84	16	16
49	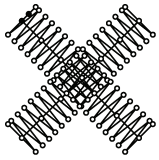	93	9.6	9.6	51	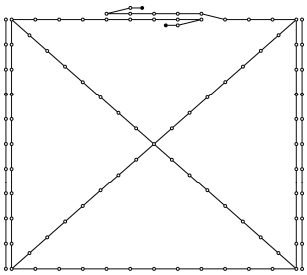	105	30	26

L-pattern tacking									
No.	Pattern	No. of stitches	Tacking size (mm)		No.	Pattern	No. of stitches	Tacking size (mm)	
			Length	Width				Length	Width
52		60	11.3	11.2	53		60	11.3	11.2
54		78	15.3	15.2	55		78	15.3	15.2

Circular stitching									
No.	Pattern	No. of stitches	Tacking size (mm)		No.	Pattern	No. of stitches	Tacking size (mm)	
			Length	Width				Length	Width
56		106	9	9	59		104	10	10
57		116	9	9	60		114	10	10
58		127	9	9	61		124	10	10

For eyelet buttonhole				
No.	Pattern	No. of stitches	Tacking size (mm)	
			Length	Width
86		21	6	2
87		28	6	2
88		35	6	2

If you want to sew a sewing pattern other than standard sewing patterns, you can create your original pattern using the PS-300B. Consult with your local Brother sales office for details.

Note when creating additional sewing patterns
When sewing data with a small number of stitches (15 stitches or less) is sewn repeatedly (short cycle operation), the main shaft motor may overheat and the “E150” error code may be generated.
If using data for an additional sewing pattern with 66 stitches or more, the maximum sewing speed is limited to 2,800 sti/min.

2-3. List of sewing patterns (BE-438HX/HS)

The sewing patterns shown below have been preset into the sewing machine. Any sewing pattern can be selected as long as the needle will drop down into the holes of the buttons.
When sewing patterns that do not have crossover stitches, the thread is trimmed after sewing of one side is completed, and then the other side is sewn.

No.	No. of holes in button	Pattern	No. of threads	No. of crossover stitches	No. of stitches	Sewing size (mm)	
						X	Y
1	2		6	—	12	3.4	0
*1 54			6	—	12		
2			8	—	14		
*1 55			8	—	14		
3			10	—	16		
4			12	—	18		
*2 5			16	—	22		
*2 6			20	—	26		
*1 56			6	—	11	0	3.4
*3 7			6	—	12		
*3 23			10	—	16		
*3 8			12	—	18		
*3 9	3		5-5-5	—	21	2.6	2.4
*3 24			7-7-7	—	27		
*3 25			5-5-5	—	21		
*3 26			7-7-7	—	27		
*1 57	4		6-6	1	18	3.4	3.4
10			6-6	1	19		
*1 58			8-8	1	22		
11			8-8	1	23		
12			8-8	3	25		
13			10-10	1	27		
27			12-12	1	31		

*1 Use for buttons with small holes.
*2 Check that the diameter of the holes in the buttons is 2 mm or greater before using the programs.
*3 Do not use the button lifter spring.

No.	No. of holes in button	Pattern	No. of threads	No. of crossover stitches	No. of stitches	Sewing size (mm)	
						X	Y
14 *4	4		6-6	0	24	3.4	3.4
36 *5			6-6	0	24		
28 *4			8-8	0	28		
37 *5			8-8	0	28		
15 *4			10-10	0	32		
38 *5			10-10	0	32		
29 *4			12-12	0	36		
39 *5			12-12	0	36		
59 *1			6-5	1	17		
16			6-5	1	18		
60 *1			8-7	1	21		
17			8-7	1	22		
30			10-9	1	26		
61 *1			6-6	1	18		
18			6-6	1	19		
62 *1			8-8	1	22		
19			8-8	1	23		
63 *1			10-10	1	26		
31			10-10	1	27		
45			12-12	1	31		
20 *4			6-6	0	24		
40 *5			6-6	0	24		
32 *4			8-8	0	28		
41 *5			8-8	0	28		
33 *4			10-10	0	32		
42 *5			10-10	0	32		

*1 Use for buttons with small holes.
*4 When sewing of one side is completed, the button clamp rises and the thread is wiped. To finish sewing, press the foot switch until sewing of the other side starts, or press the foot switch again after sewing of the other side is completed.
*5 When sewing of one side is completed, the thread will be wiped without the button clamp rising, and then the other side will be sewn.

No.	No. of holes in button	Pattern	No. of threads	No. of crossover stitches	No. of stitches	Sewing size (mm) X	Sewing size (mm) Y
64 *1	4		6-6	1	18	3.4	3.4
21 *3			6-6	1	19	2.4	
34 *3			10-10	1	27		
22 *3*4			6-6	0	24		
43 *3*5			6-6	0	24		
35 *3*4			10-10	0	32		
44 *3*5			10-10	0	32		
46			6-7	1	19	3.4	3.4
47			8-9	1	23		
48			10-11	1	27		
49			12-13	1	31		

*1 Use for buttons with small holes.
*3 Do not use the button lifter spring.
*4 When sewing of one side is completed, the button clamp rises and the thread is wiped. To finish sewing, press the foot switch until sewing of the other side starts, or press the foot switch again after sewing of the other side is completed.
*5 When sewing of one side is completed, the thread will be wiped without the button clamp rising, and then the other side will be sewn.

For shank button					
No.	Pattern	No. of threads	No. of stitches	Sewing size (mm) X	Sewing size (mm) Y
50		6	12	3.4	0
51		8	14		
52		10	16		
53		12	18		

Note when creating additional sewing patterns
When sewing data with a small number of stitches (15 stitches or less) is sewn repeatedly (short cycle operation), the main shaft motor may overheat and the “E150” error code may be generated.
If using data for an additional sewing pattern with 66 stitches or more, the maximum sewing speed is limited to 2,800 sti/min.

3. INSTALLATION

⚠ CAUTION

- Machine installation should only be carried out by a qualified technician.
- Contact your Brother dealer or a qualified electrician for any electrical work that may need to be done.
- The sewing machine weighs approximately 60 kg (132lb). The installation should be carried out by two or more people.
- Do not connect the power cord until installation is complete. The machine may operate if the foot switch is depressed by mistake, which could result in injury.
- Secure the table so that it will not move when tilting back the machine head. If the table moves, it may crush your feet or cause other injuries.
- Use both hands to hold the machine head when tilting it back or returning it to its original position. If only one hand is used, the weight of the machine head may cause your hand to slip, and your hand may get caught.

About the machine set-up location

- Do not set up this sewing machine near other equipment such as televisions, radios or cordless telephones, otherwise such equipment may be affected by electronic interference from the sewing machine.
- The sewing machine should be plugged directly into an AC wall outlet. Operation problems may result if extension cords are used.

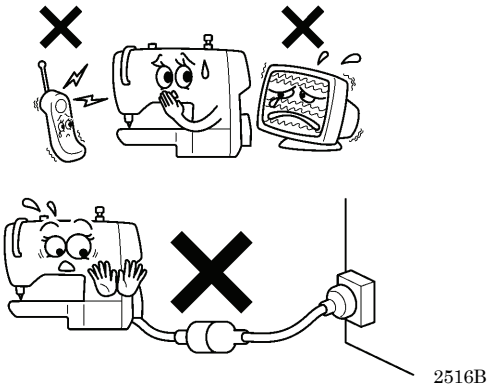

Carrying the machine

- The machine should be carried by the arm by two people as shown in the illustration.
- When holding the machine head, do not hold it by the pulse motor (1), otherwise it may damage the pulse motor.

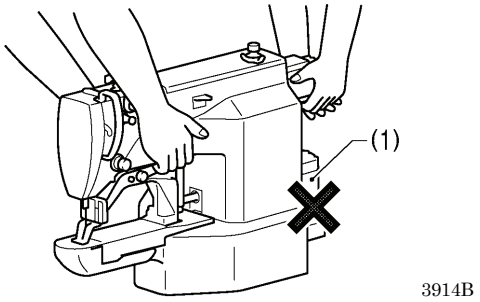

Tilting back the machine head

1. Pack away any tools which are near the table.
2. Secure the foot (A) so that the table will not move, and then pull the arm with both hands to tilt back the machine head.

   * While supporting the arm with both hands, gently lower it.

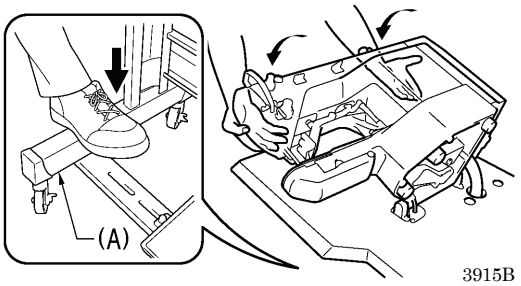

Returning the machine head to the upright position

1. Pack away any tools which are near the table.
2. While supporting the arm with both hands, gently return the machine head to its original position.

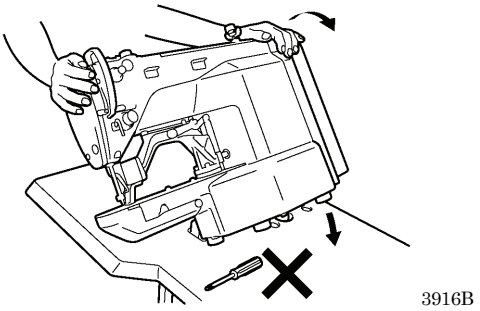

3-1. Table processing diagram

- The thickness of the table should be at least 40 mm, and it should be strong enough to bear the weight and vibration of the sewing machine.
- Check that the control box is at least 10 mm away from the leg. If the control box and the leg are too close together, it may result in incorrect sewing machine operation.

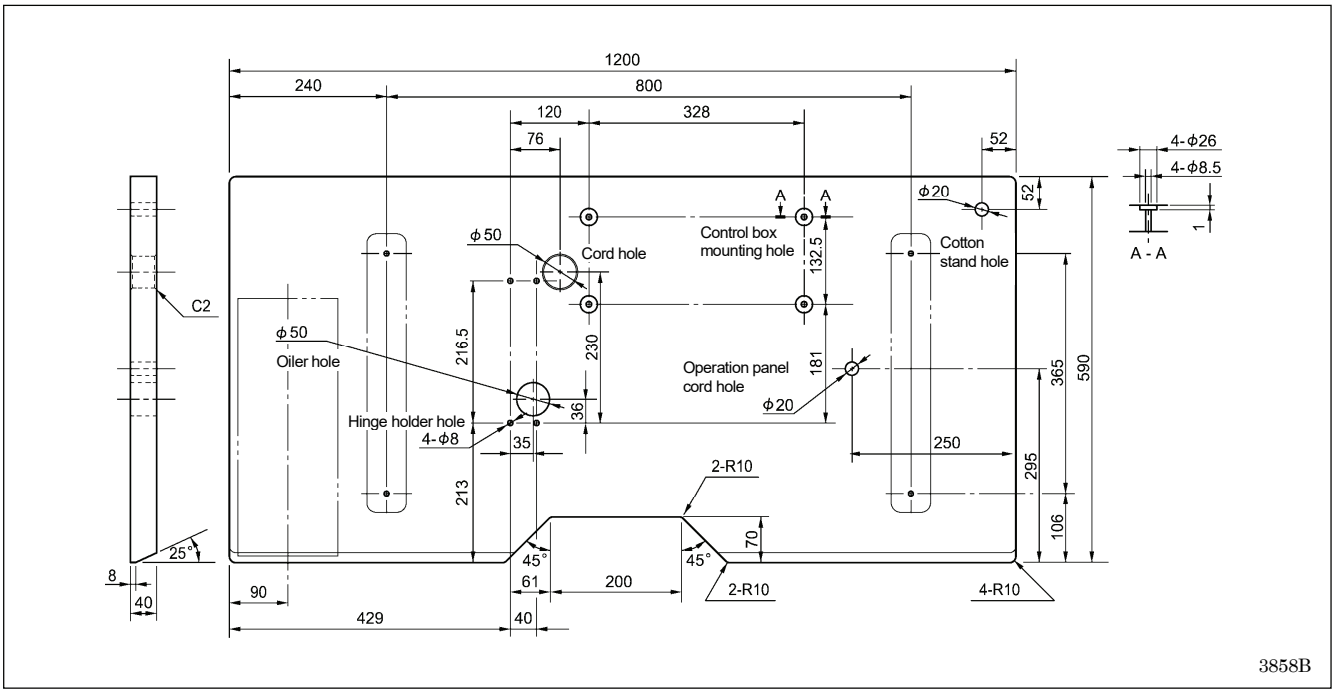

3-2. Installing the control box

⚠ DANGER

Wait at least 5 minutes after turning off the power switch and disconnecting the power cord from the wall outlet before opening the cover of the control box. Touching areas where high voltages are present can result in severe injury.

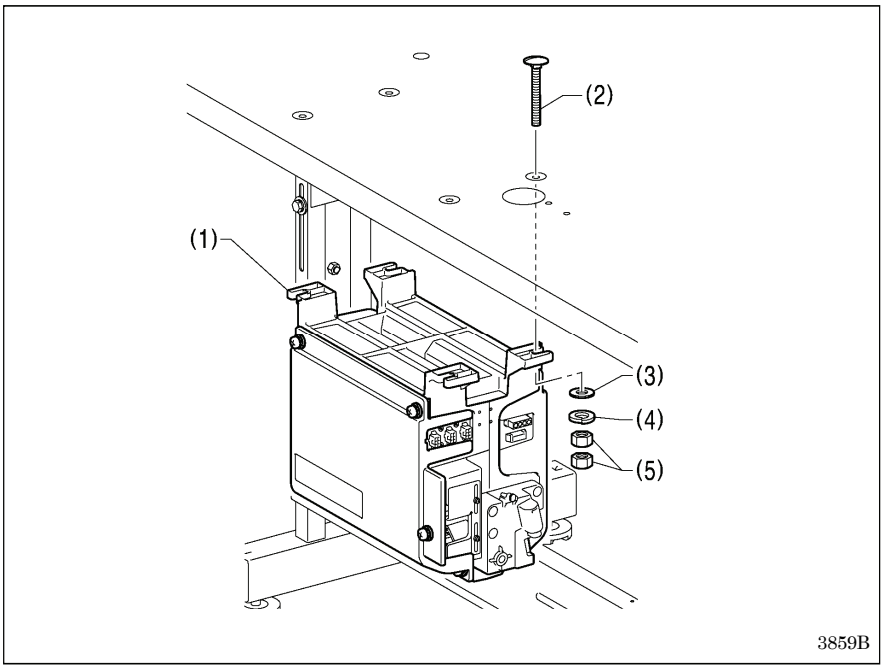

(1) Control box
(2) Bolts [4 pcs]
(3) Plain washers [4 pcs]
(4) Spring washers [4 pcs]
(5) Nuts [8 pcs]

3-3. Installing the oiler

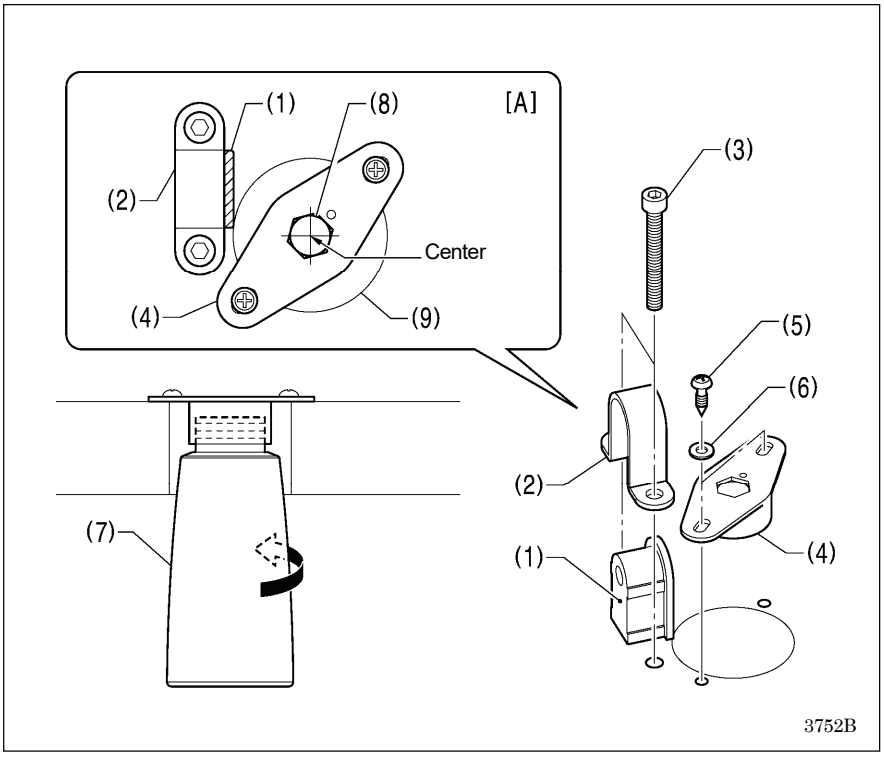

Before installing the oiler, provisionally install the rubber cushion (1) and the hinge holder (2) to the table with the two bolts (3).

(4) Dust oiler support
(5) Wood screws [2 pcs]
(6) Plain washers [2 pcs]
(7) Oiler

* Install the dust oiler support (4) so that the hole (8) in the dust oiler support (4) is in the center of the hole (9) in the table for installing the oiler (7) as shown in figure [A].

NOTE:
- Make sure that the dust oiler support (4) does not interfere with the hinge holder (2).

3-4. Installing the machine head

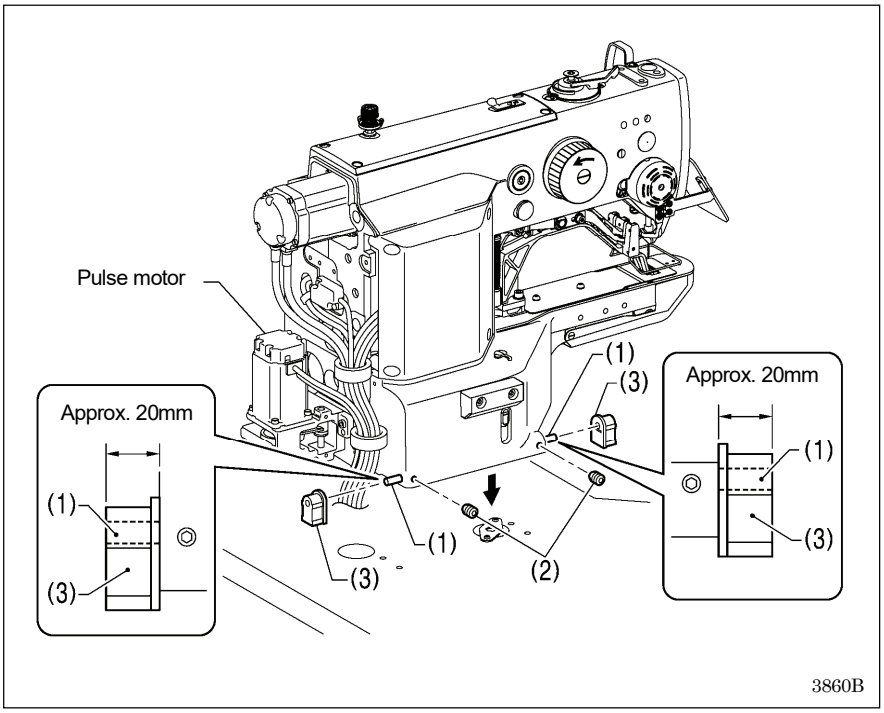

(1) Pins [2 pcs]
(2) Set screws [2 pcs]
(3) Rubber cushion assembly [2 pcs]

Place the machine head gently on top of the table.

NOTE:
- Be careful not to clamp any cords between the machine head and the table.
- When holding the machine head, do not hold it by the pulse motor, otherwise it may damage the pulse motor.

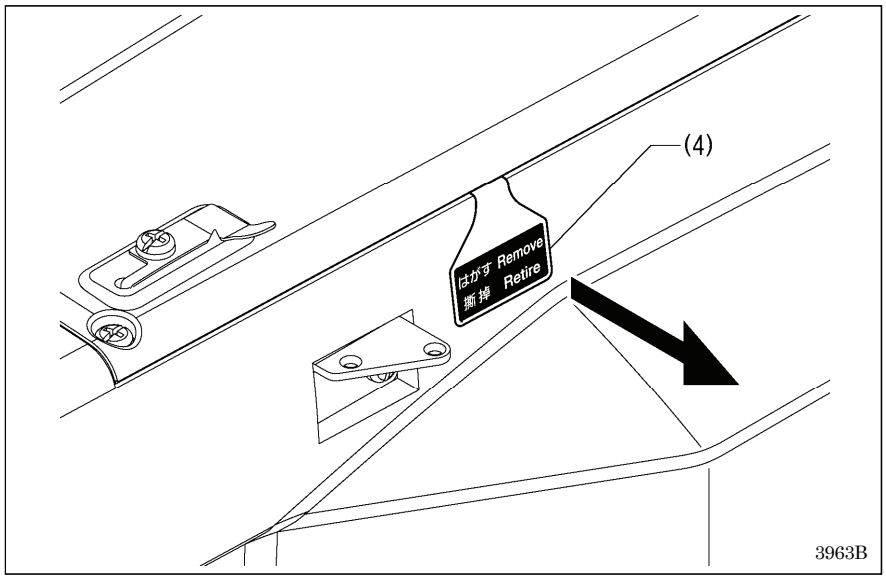

Pull the seal (4) in the direction of the arrow to remove it.

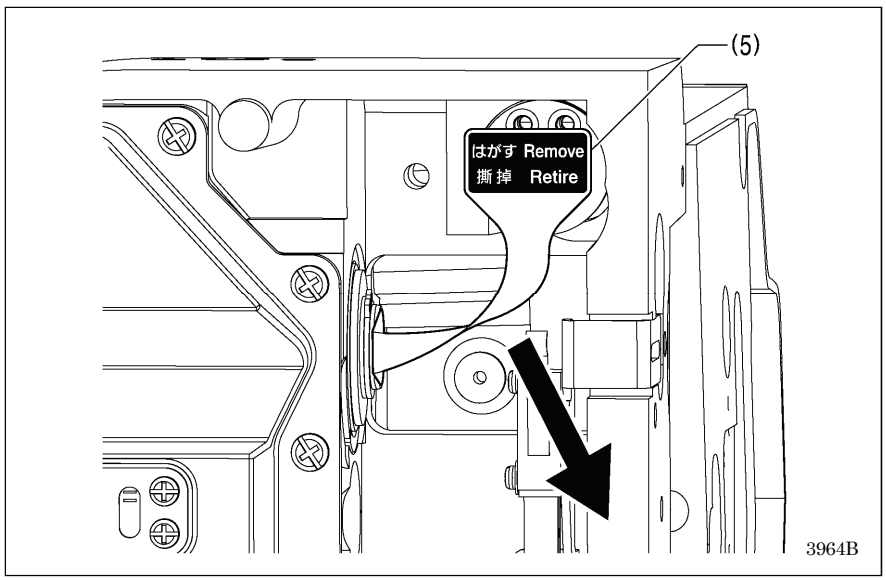

Remove the seal (5) completely.

NOTE:
- If you operate the sewing machine without removing the seals (4) and (5), oil leaks may occur or the sewing machine may seize.

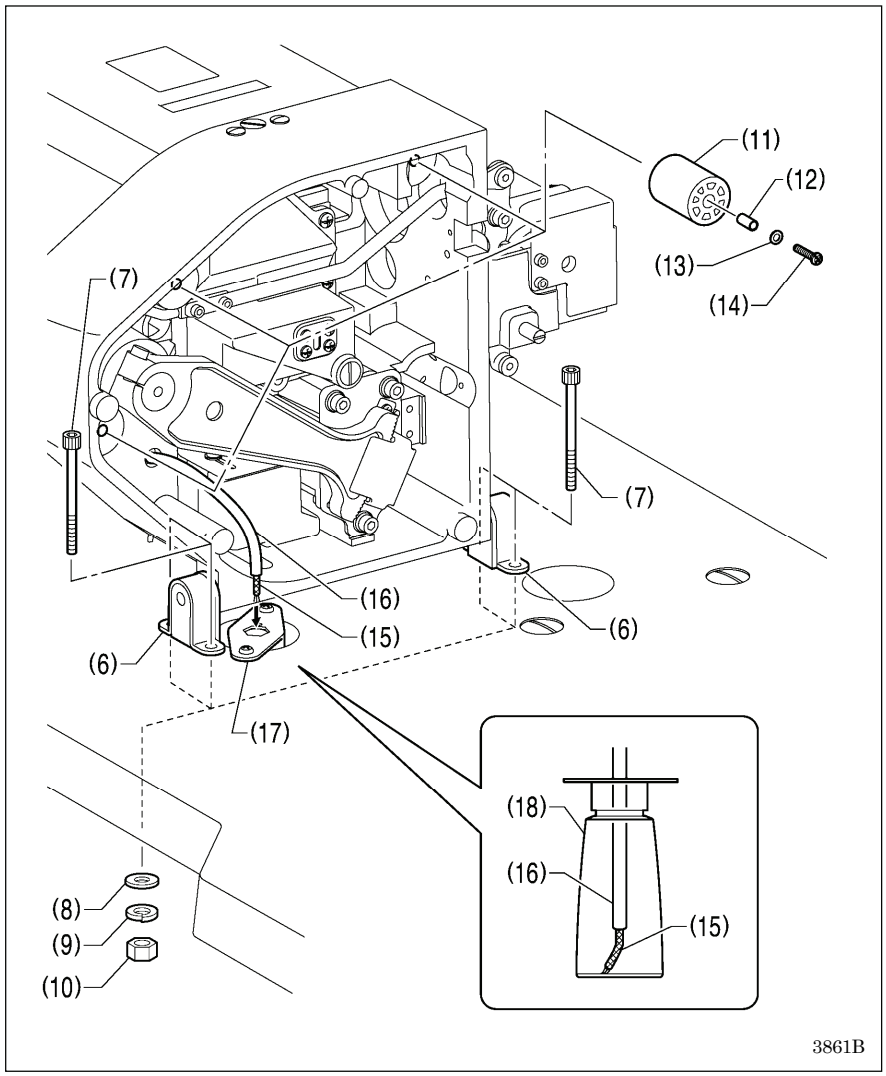

(6) Hinge holders [2 pcs]
(7) Bolts [4 pcs]
(8) Plain washers [4 pcs]
(9) Spring washers [4 pcs]
(10) Nuts [4 pcs]
(11) Rubber cushions [3 pcs]
(12) Collars [3 pcs]
(13) Plain washers [3 pcs]
(14) Screws [3 pcs]
(15) Felt
(16) Oil tube

Pass the felt (15) and the oil tube (16) through the hole in the dust oiler support (17) into the oiler (18).

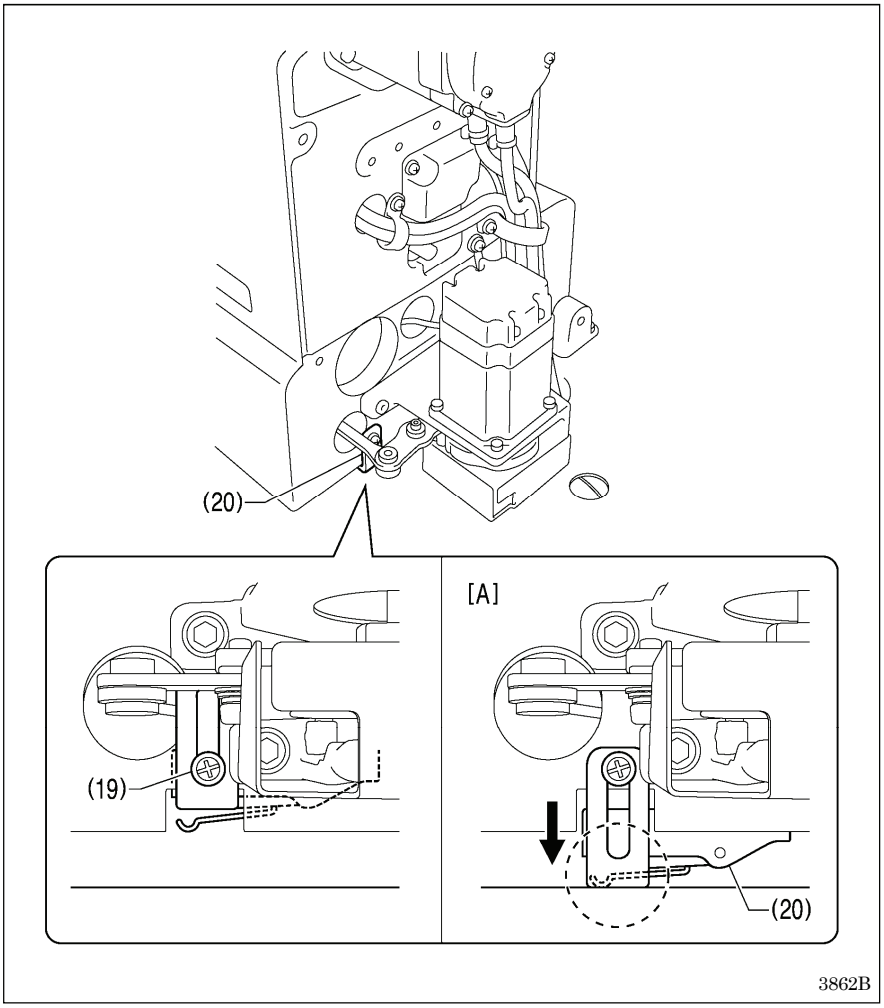

1. Loosen the screw (19), and then install the machine head switch (20) in the position shown in the illustration.
2. Check that the machine head switch as turned on as shown in figure [A].

* If the machine head switch is not turned on, adjust the installation position while referring to “3-15. Checking the machine head switch”.

3-5. Installing the operation panel

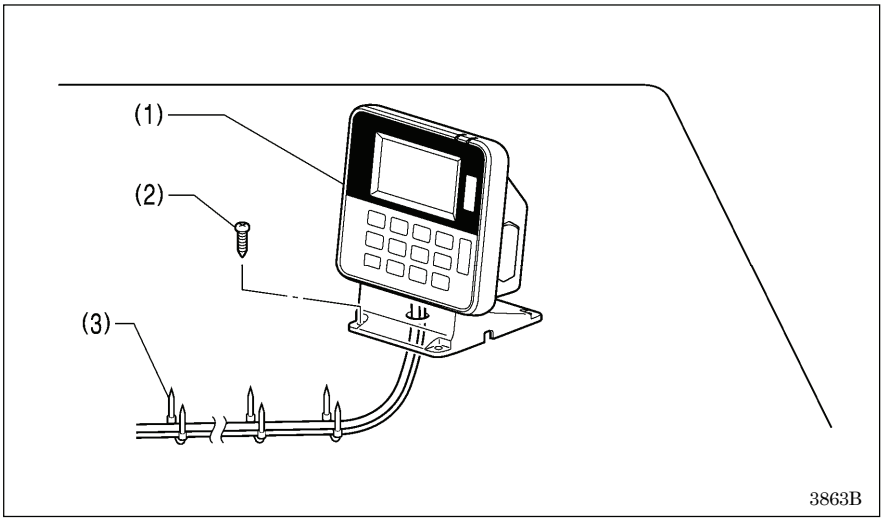

(1) Operation panel
(2) Wood screws [4 pcs]

- Pass the panel cord through the hole in the table, and then insert it into the control box through the hole in the side of the control box.

(3) Staples [3 pcs]

3-6. Installing the cotton stand

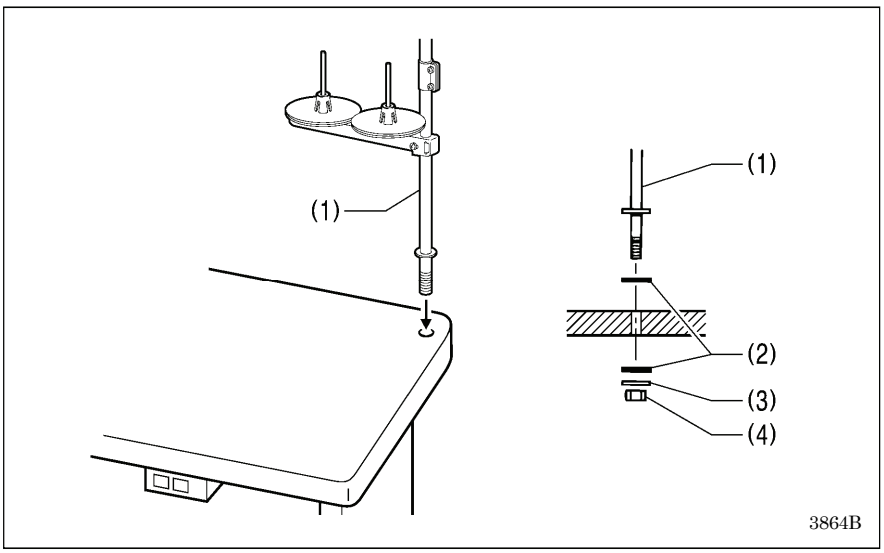

(1) Cotton stand

NOTE:
Securely tighten the nut (4) so that the two washers (2) and the spring washer (3) are securely clamped and so that the cotton stand (1) does not move.

3-7. Installing the button tray (BE-438HX/HS)

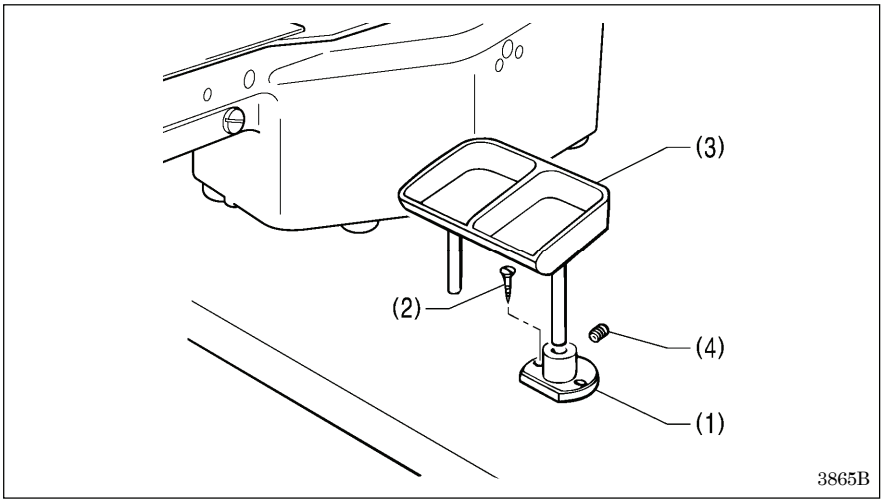

Install the button tray at a place convenient for operation.

(1) Button tray holder
(2) Wood screws [2 pcs]
(3) Button tray
(4) Set screw

3-8. Installing the eye guard

⚠ CAUTION

Attach all safety devices before using the sewing machine.
If the machine is used without these devices attached, injury may result.

<KE-430HS, BE-438HX, BE-438HS>

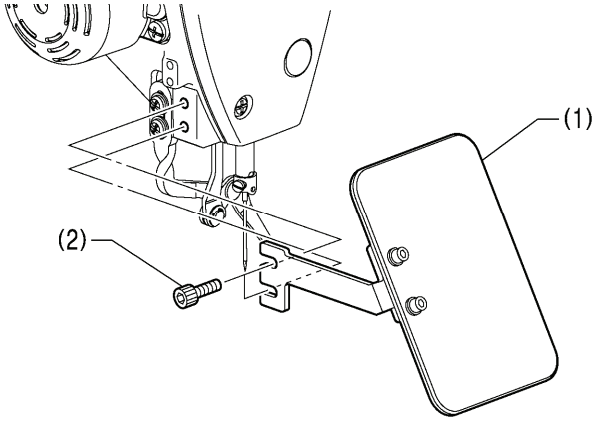

3866B

(1) Eye guard assembly
(2) Screws [2 pcs]

<KE-430HX>

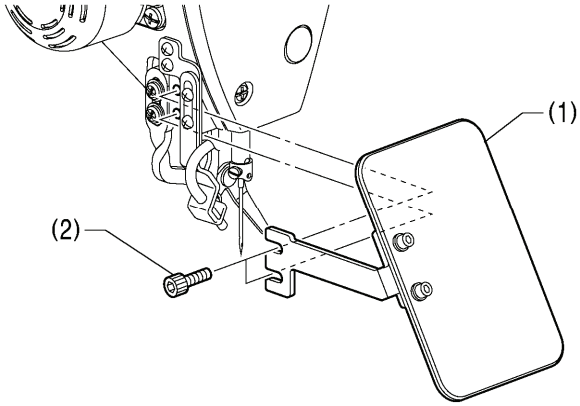

3911B

3-9. Installing the needle cooling equipment (KE-430HX)

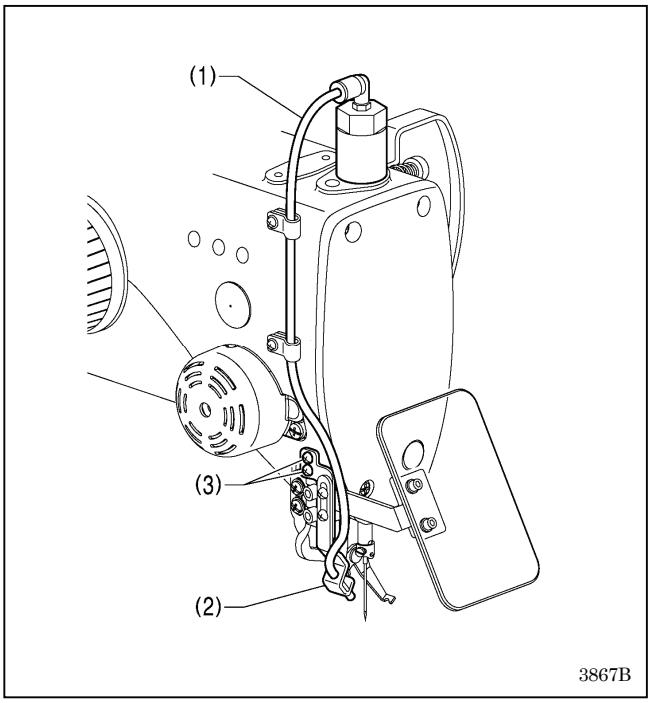

(1) Tube
(2) Air nozzle assembly
(3) Screws

3-10. Connecting the cords

CAUTION

- Contact your Brother dealer or a qualified electrician for any electrical work that may need to be done.
- Do not connect the power cord until all cords have been connected.
  The machine may operate if the foot switch is depressed by mistake, which could result in injury.
- When securing the cords, do not bend the cords excessively or fasten them too hard with staples, otherwise there is the danger that fire or electric shocks could occur.

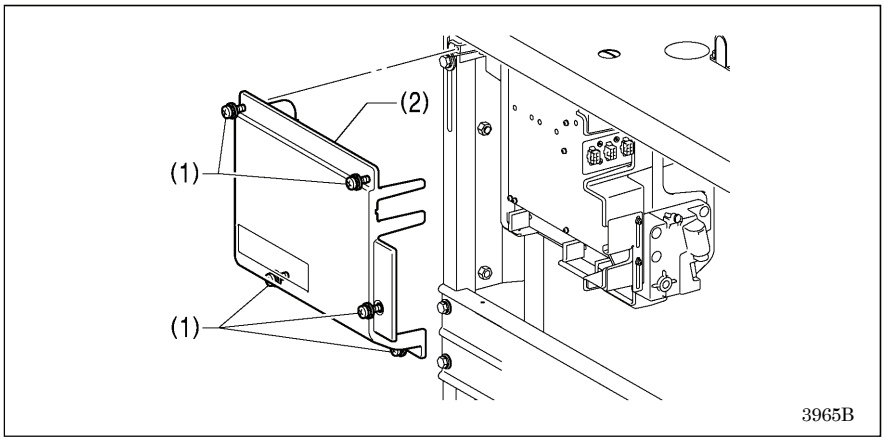

1. Remove the five screws (1), and then remove the control box cover (2).

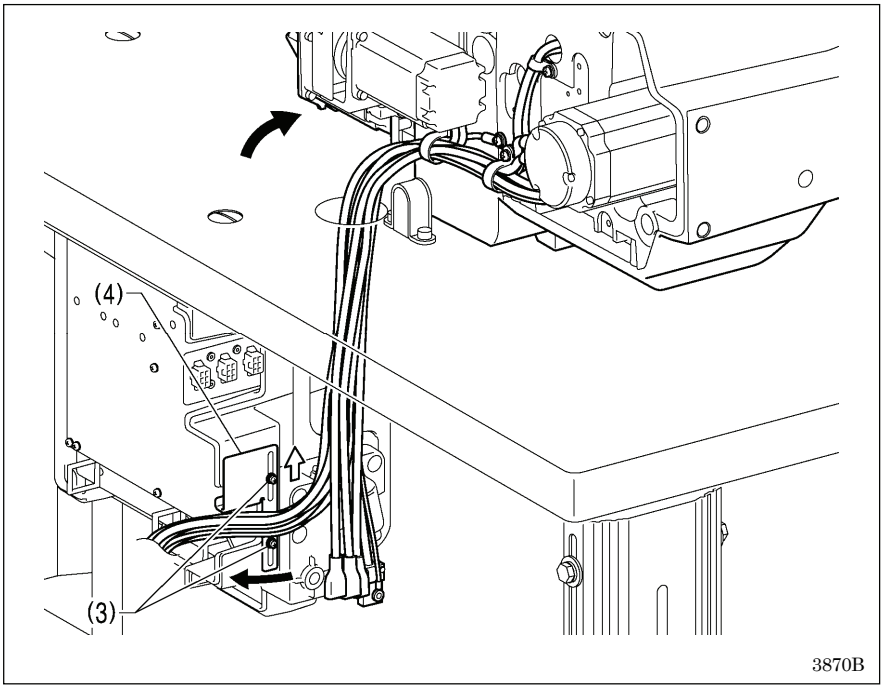

2. Gently tilt back the machine head.
3. Pass the cord bundle through the hole in the work table.
4. Loosen the two screws (3), and then open the cord presser plate (4) in the direction of the white arrow and pass the cord bundle through the opening.
5. Securely connect the connectors as indicated in the table below.
   (Refer to following page.)

NOTE:
- Check that the connector is facing the correct way, and then insert it firmly until it locks into place.
- Secure the cables with cable ties and cord clamps, while being careful not to pull on the connector.

(Continued on next page.)

<Main P. C. board>

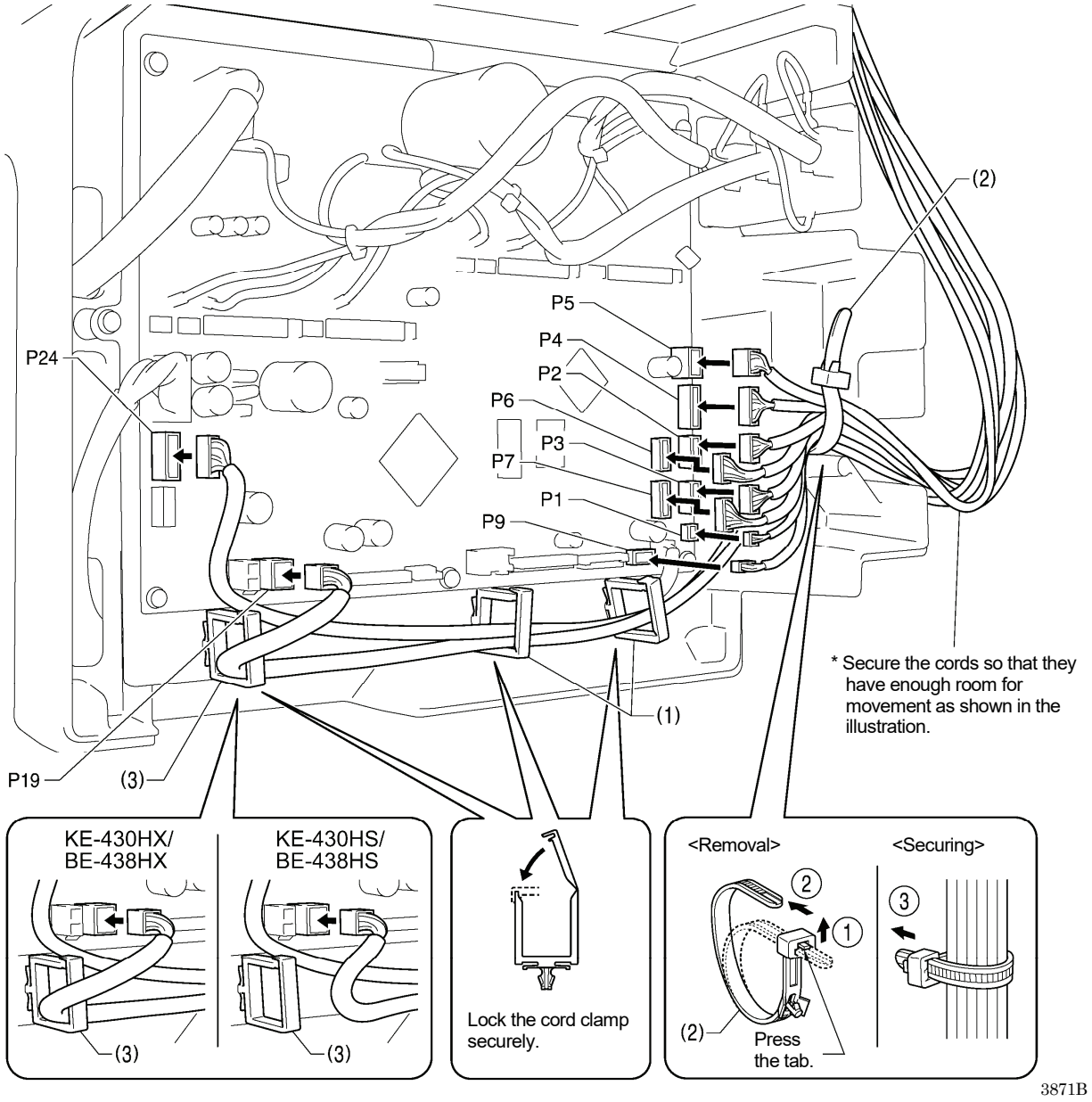

Connectors	Connection location on main P. C. board	Cord clamp / cable tie
X pulse motor encoder [6-pin] White	P2 (X-ENC)	(2)
Y pulse motor encoder [6-pin] Red	P3 (Y-ENC)	(2)
Work clamp pulse motor encoder [6-pin] Black	P6 (P-ENC)	(2)
Thread trimmer pulse motor encoder [5-pin] Blue	P7 (T-ENC)	(2)
Machine head switch [3-pin]	P9 (HEAD-SW)	(2)
Machine head memory [6-pin]	P4 (HEAD-MEM)	(2)
Digital tension [4-pin] (KE-430HX/BE-438HX)	P19 (SOL2)	(1), (2), (3)
Tension release solenoid [4-pin] (KE-430HS/BE-438HS)		(1), (2)
Thread trimmer pulse motor [4-pin] Blue	P24 (TPM)	(1), (2)
LED [2-pin]	P1 (LED)	(2)
Operation panel [10-pin]	P5 (PANEL)	(2)

(Continued on next page.)

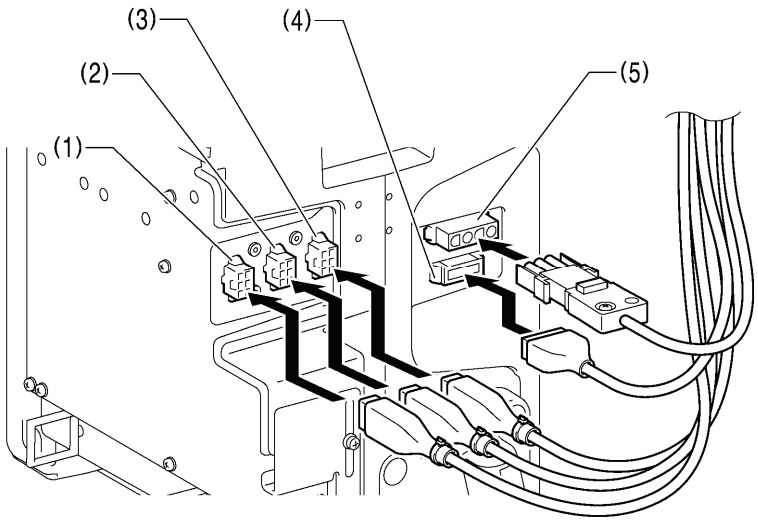

3872B

Connectors	Insertion point
Work clamp pulse motor [6-pin] Black	(1)
Y pulse motor [6-pin] Red	(2)
X pulse motor [6-pin] White	(3)
Synchronizer [16-pin]	(4)
Upper shaft motor [4-pin]	(5)

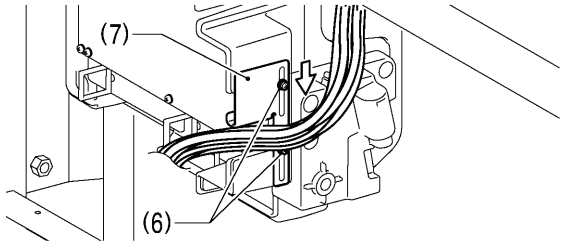

3873B

6. Close the cord presser plate (7) in the direction of the white arrow, and secure it by tightening the two screws (6).
   NOTE:
   Close the cord presser plate (7) securely so that no foreign objects, insects or small animals can get inside the control box.
7. Check that the cords do not get pulled, and then gently return the machine head to its original position.

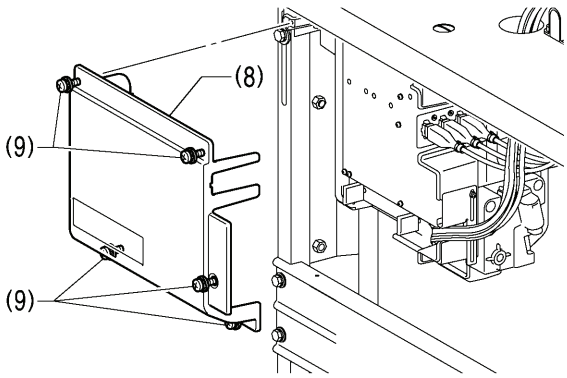

3912B

8. Use the five screws (9) to tighten the cover (8) of the control box.
   Check that none of the cords are being clamped by the cover at this time.

3-11. Connecting the ground wire

⚠ CAUTION

Be sure to connect the ground. If the ground connection is not secure, you run the risk of receiving a serious electric shock, and problems with correct operation may also occur.

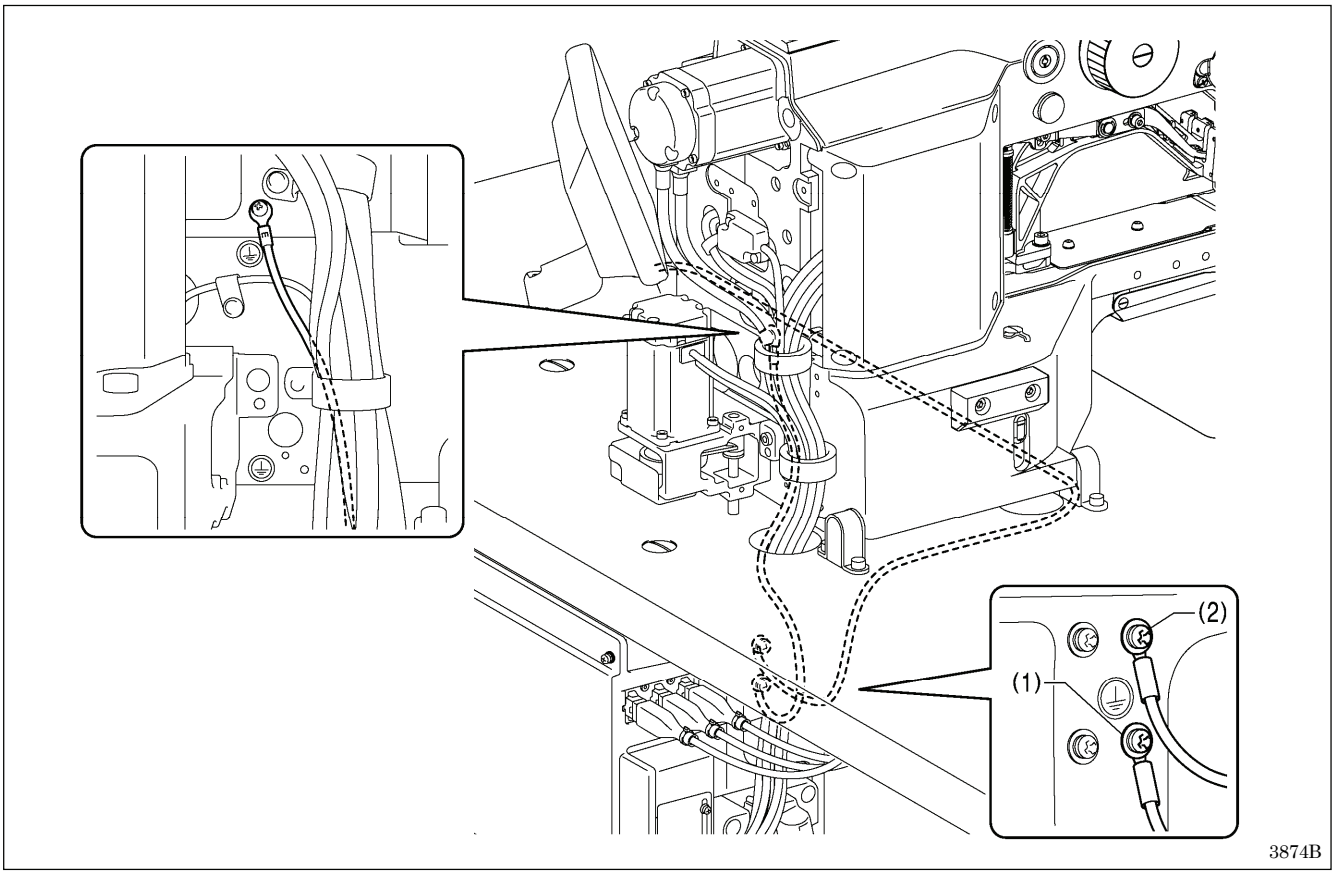

(1) Ground wire from the machine head (Ground mark position)

(2) Ground wire from the operation panel

* The recommended tightening torque for the ground screws is 1.0±0.1 N·m.

NOTE:

Make sure that the ground connections are secure in order to ensure safety.

3-12. Installing the rear cover

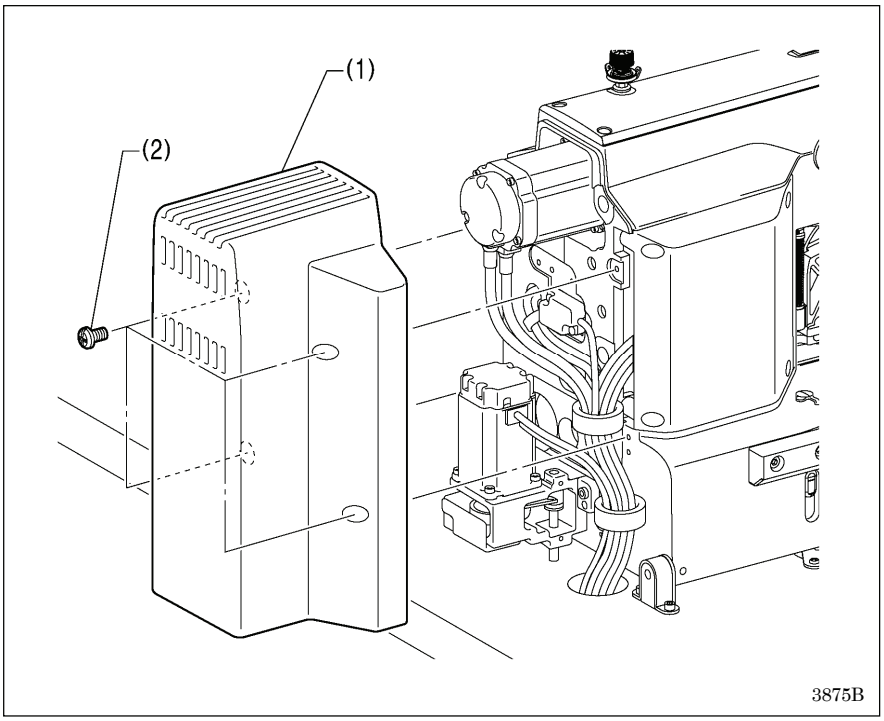

(1) Rear cover
(2) Screws [4 pcs]

NOTE:
Be careful not to clamp the cords when installing the rear cover (1).

3-13. Lubrication

⚠ CAUTION

- Turn off the power switch before carrying out work.
  The machine may operate if the foot switch is depressed by mistake, which could result in injury.
- Be sure to wear protective goggles and gloves when handling the lubricating oil, so that it does not get into your eyes or onto your skin.
  If care is not taken, inflammation can result. Furthermore, do not drink the lubricating oil. Diarrhea or vomiting may result.
  Keep the oil out of the reach of children.
- When cutting the nozzle of the oil tank, hold the base of the nozzle securely.
  If you hold the end of the nozzle, injury from the scissors may result.

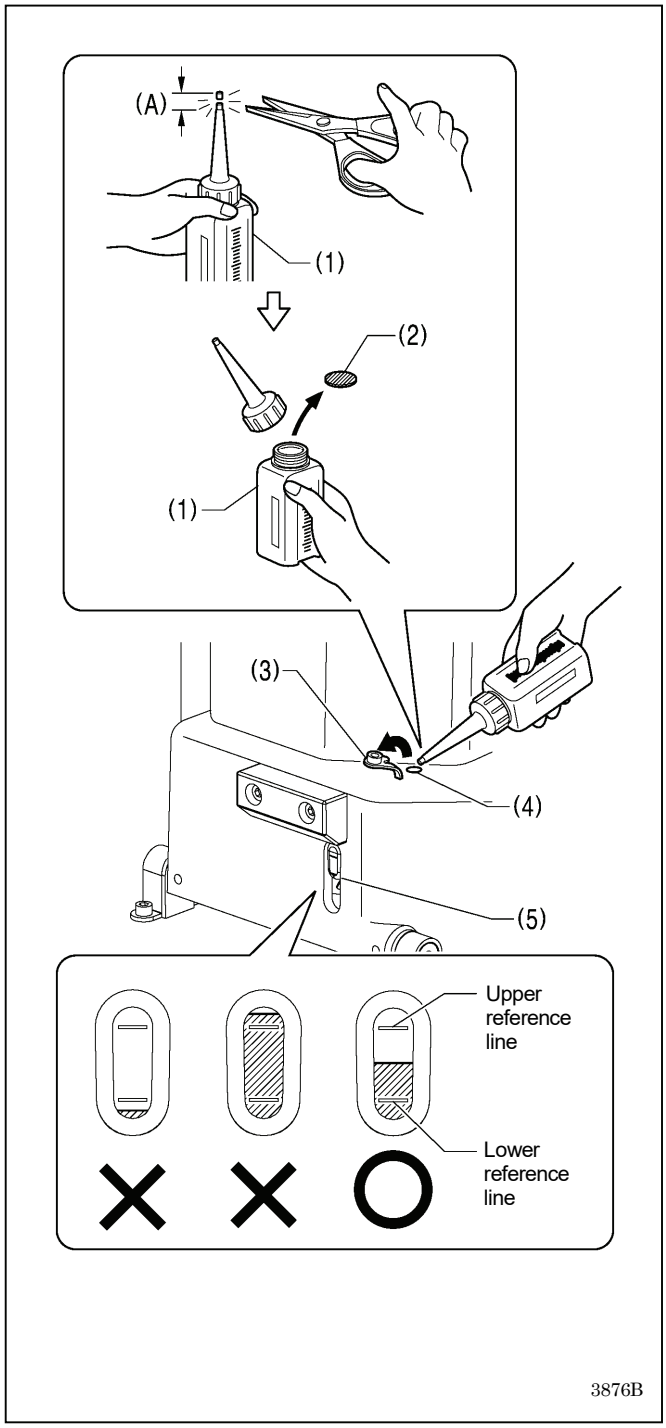

- The sewing machine should always be lubricated and the oil supply replenished before it is used for the first time, and also after long periods of non-use.
- Use only the lubricating oil <JXTG Nippon Oil & Energy SEWINGLUBE N 10; VG10> specified by Brother.
  * If this type of lubricating oil is difficult to obtain, the recommended oil to use is <Exxon Mobil Essotex SM10; VG10>.

1. Hold the base of the nozzle of the accessory oil tank (1), and use scissors to cut about half-way along the straight section (A) of the nozzle.
2. Loosen and remove the nozzle, and then remove the seal (2).
3. Tighten the nozzle.
4. Open the oil feeding pocket cover (3).
5. Insert the nozzle of the oil tank (1) deeply into the oil feeding pocket (4), and then add lubricating oil.
6. Check that the oil level is between the upper reference line and the lower reference line in the oil gauge window (5).

NOTE:
- When the oil level drops below the lower reference line in the oil gauge window, be sure to add more oil. If the oil level drops below the lower reference line, problems with operation of the sewing machine such as seizing may occur.
- Do not add oil so that the oil level goes above the upper reference line, otherwise the oil may spill out when the machine head is tilted back

(Continued on next page.)

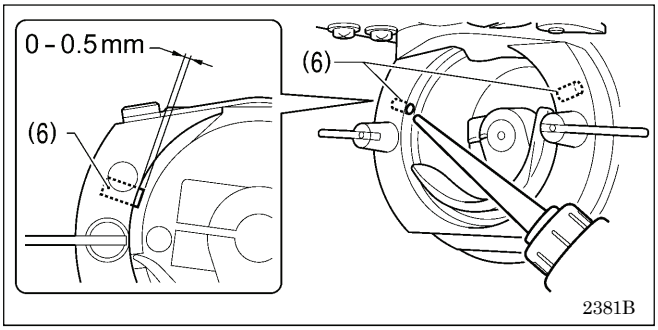

7. Pour oil in through the two holes of the shuttle race base assembly so that the felt (6) is lightly moistened.

NOTE:
- The two pieces of felt (6) should normally project by 0 to 0.5 mm from the hook race. Be careful not to push in the felt (6) when lubricating.
- If there is no more oil on the felt (6) of the shuttle race base assembly, problems with sewing may result.

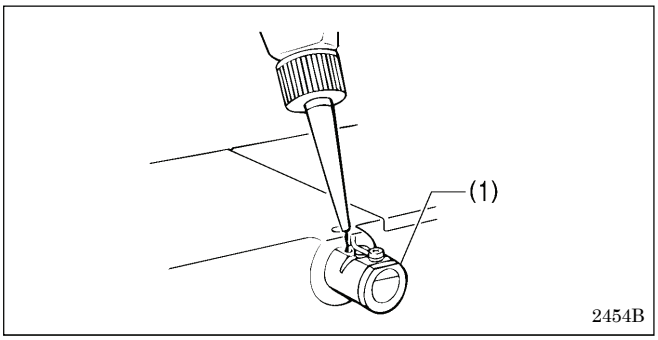

<When using the needle cooler (option)>
If using the needle cooler (option) (1), fill it with silicone oil.

3-14. Connecting the power cord

⚠ CAUTION

Be sure to connect the ground. If the ground connection is not secure, you run a high risk of receiving a serious electric shock, and problems with correct operation may also occur.

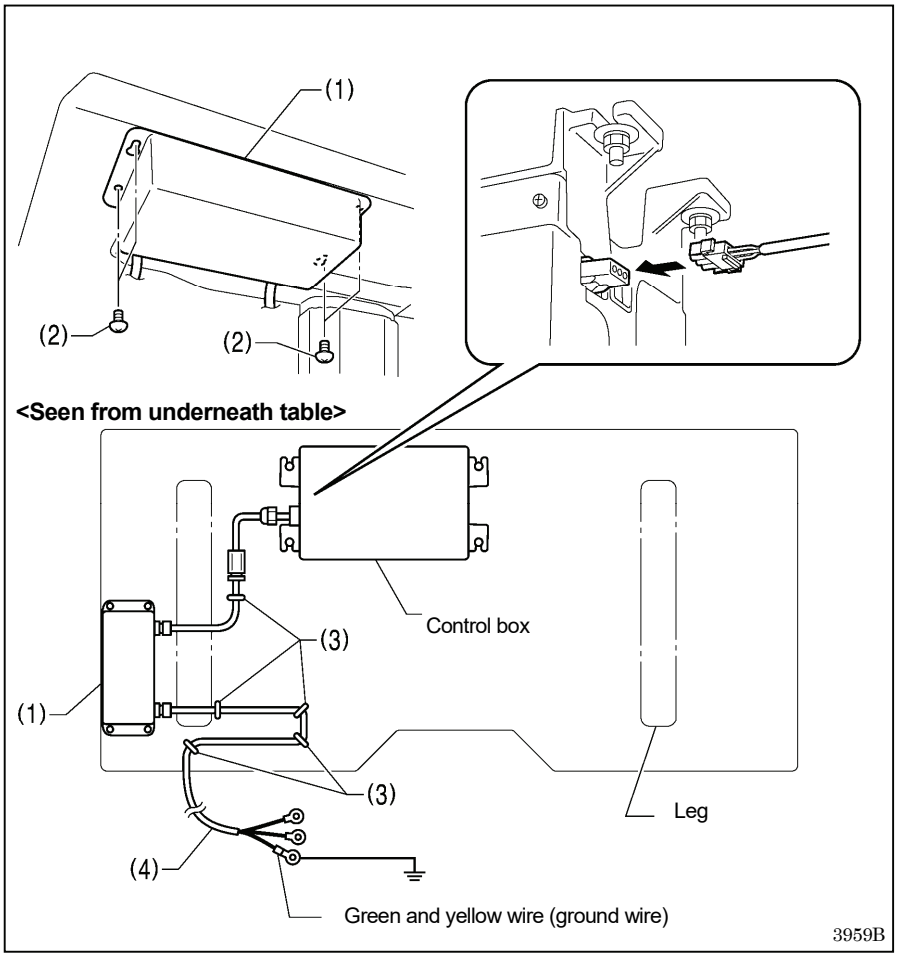

Connect cords that match the voltage specifications.

<EU specifications>
(1) Filter box
(2) Screws [4 pcs]
(3) Staples [5 pcs]
(4) Power cord

1. Attach an appropriate switch and cable to the power cord (4). (The green and yellow wire is the ground wire.)
2. Insert the power plug into a properly-grounded electrical outlet.

NOTE:
- Take care when tapping in the five staples (3) to make sure that they do not pierce the cords.
- Do not use extension cords, otherwise machine operation problems may result.

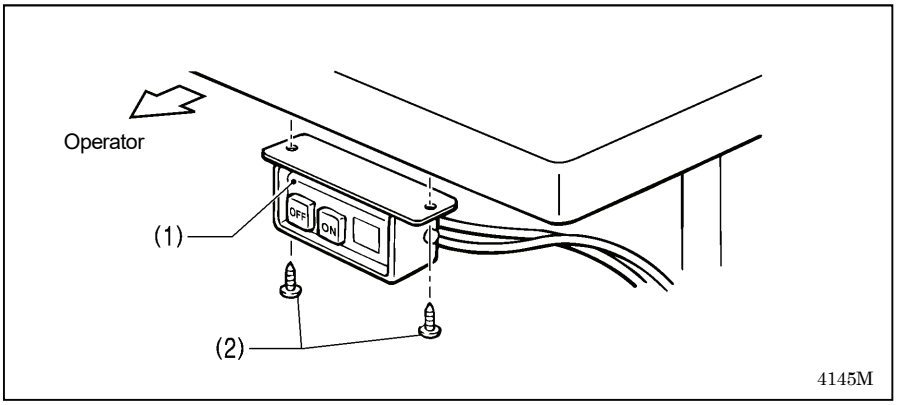

<200 V system>

(1) Power switch
(2) Wood screws [2 pcs]

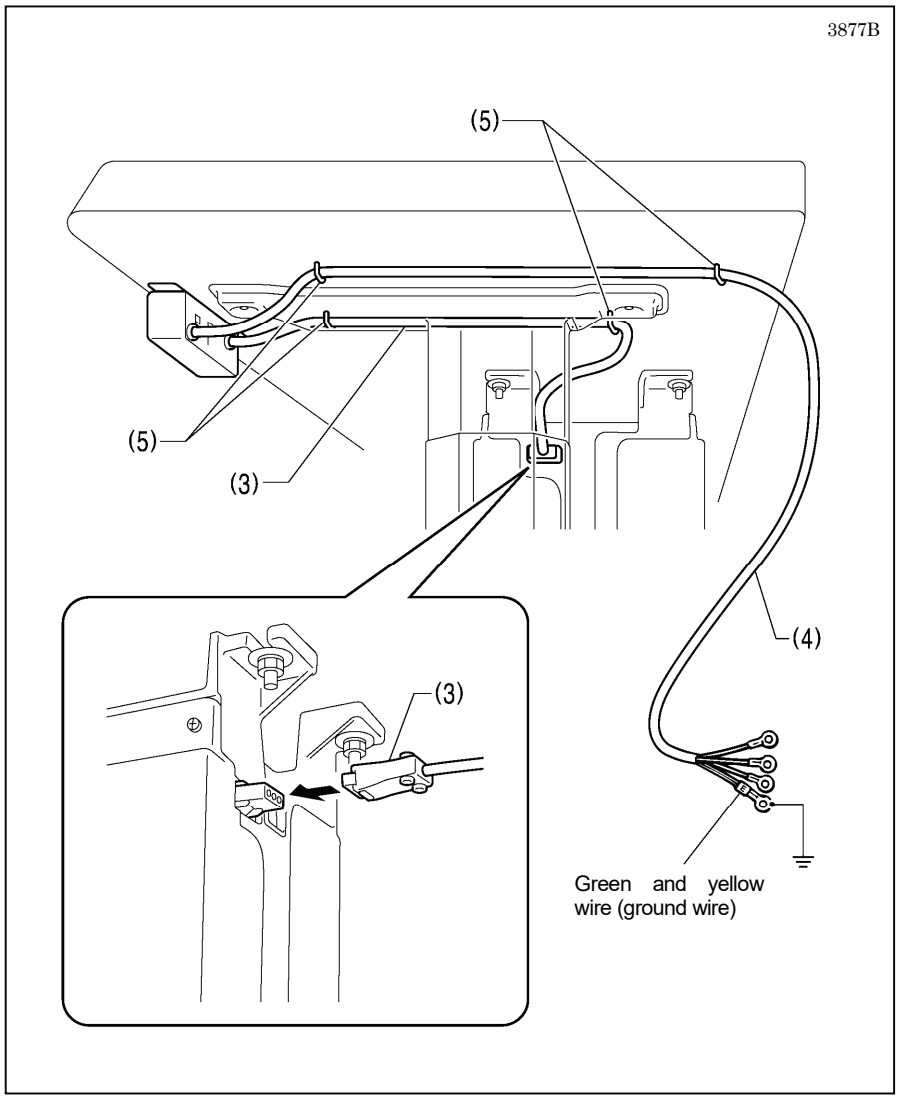

(3) 3-pin power supply connector
(4) Power cord
(5) Staples [4 pcs]

1. Attach an appropriate plug to the power cord (4). (The green and yellow wire is the ground wire.)
2. Insert the power plug into a properly-grounded electrical outlet.

NOTE:
- Take care when tapping in the four staples (5) to make sure that they do not pierce the cords.
- Do not use extension cords, otherwise machine operation problems may result.

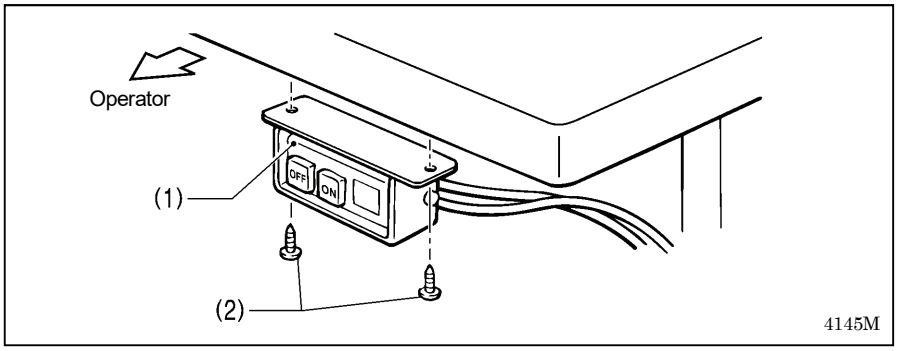

<100 V / 400 V system>

(1) Power switch
(2) Wood screws [2 pcs]

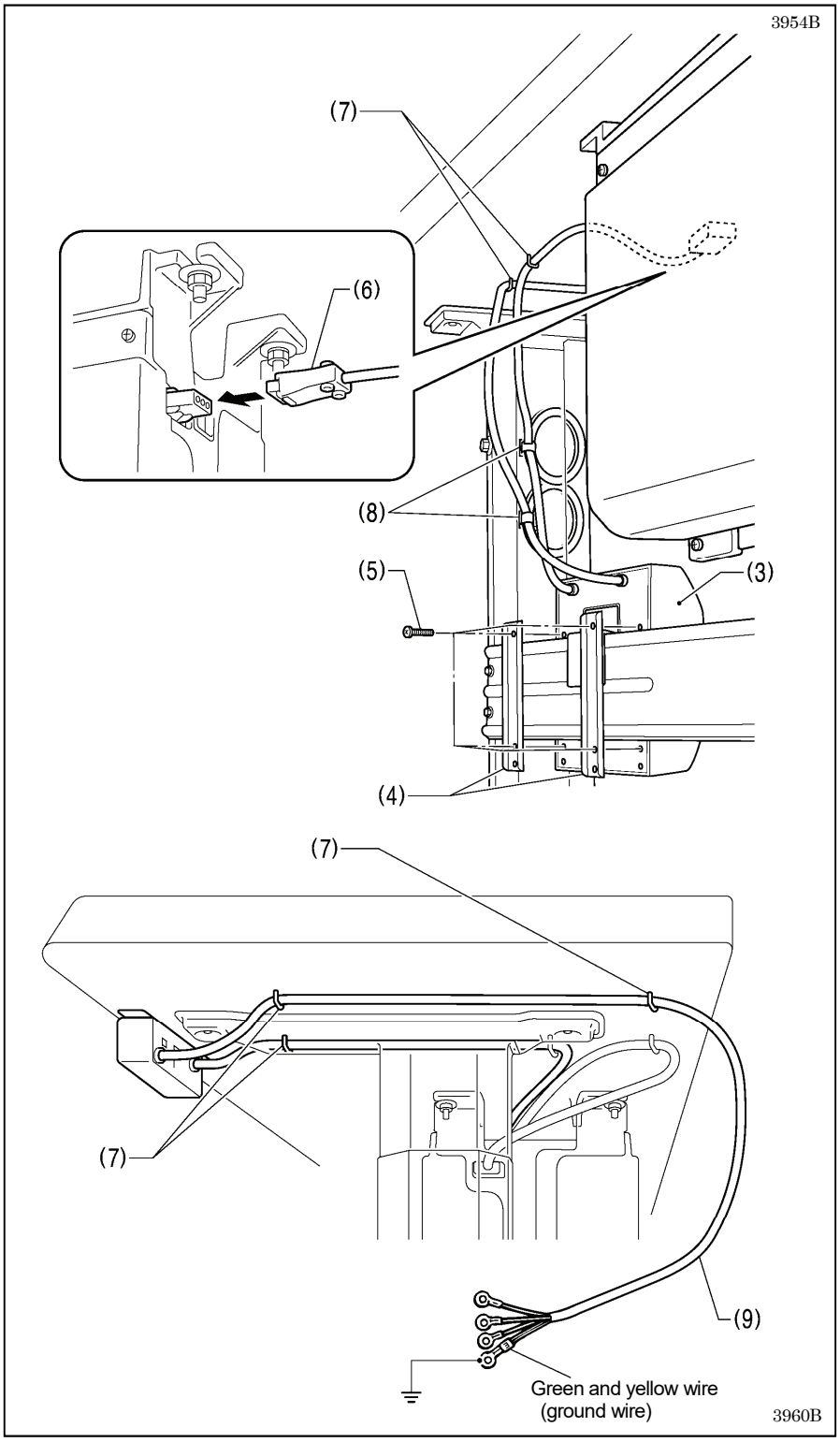

(3) Transformer box
(4) Transformer box plates [2 pcs]
(5) Screws [with washer] [4 pcs]
(6) 3-pin power supply connector
(7) Staples [5 pcs]
(8) Cord clamps [2 pcs]
(9) Power cord

1. Attach an appropriate plug to the power cord (9). (The green and yellow wire is the ground wire.)
2. Insert the power plug into a properly-grounded electrical outlet.

* The inside of the control box uses single-phase power.

NOTE:
- If the ground connection is not secure, electric shocks, operating errors or damage to electronic components such as P.C. boards may occur.
- Take care when tapping in the five staples (7) to make sure that they do not pierce the cords.
- Do not use extension cords, otherwise machine operation problems may result.

3-15. Checking the machine head switch

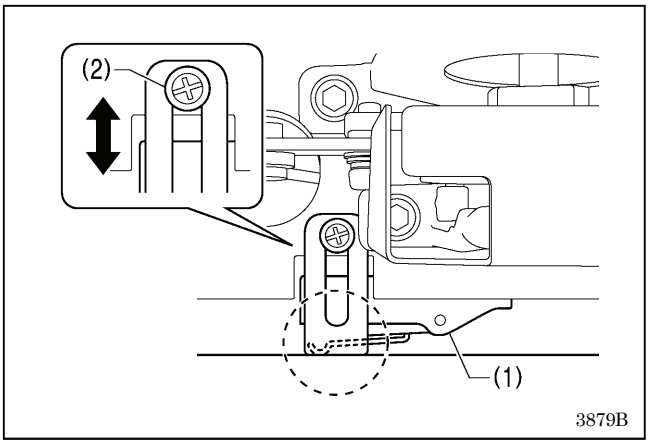

1. Turn on the power switch.
2. Check that no error numbers appear on the operation panel.

<If error “E050”, “E051” or “E055” is displayed>
If the machine head switch (1) is not turned on, error “E050”, “E051” or “E055” will occur.

Use the screw (2) to adjust the installation position of the machine head switch as shown in the illustration.

3-16. Starting up

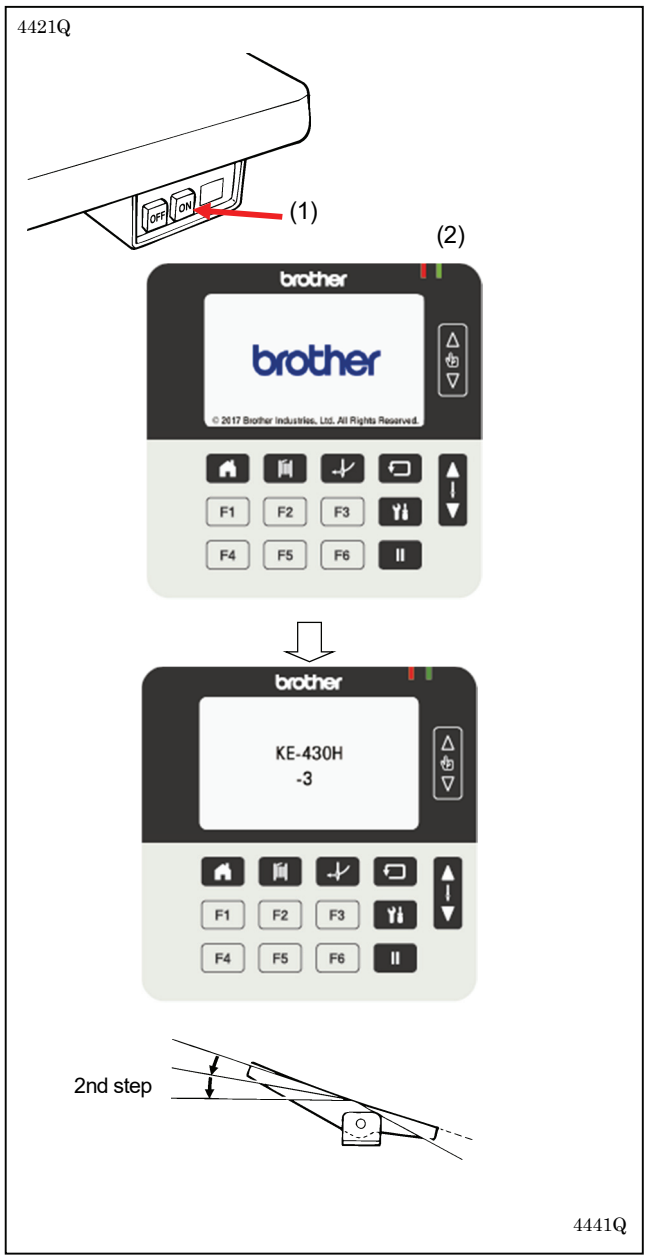

1. Turn on the power switch (1).
   The power supply LED (2) on the operation panel will illuminate and the "brother" logo will be displayed, and then the model name and specifications will be displayed.

Specifications	Display
Light-weight materials	- 1
Medium-weight materials	- 3
Heavy-weight materials	- 5
Knitted materials	- K

   After this, the screen will switch to the home screen.

2. Depress the foot switch to the 2nd step.
   The feed mechanism will move to the home position and the work clamp / button clamp will rise.

4. PREPARATION BEFORE SEWING

4-1. Installing the needle

⚠ CAUTION

Turn off the power switch before installing the needle, otherwise the machine may operate if the foot switch is depressed by mistake, which could result in injury.

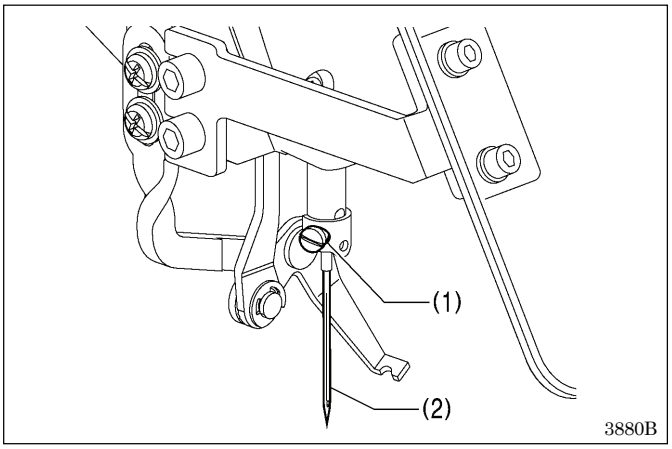

1. Loosen the set screw (1).
2. Insert the needle (2) in a straight line as far as it will go, making sure that the long groove on the needle is at the front, and then securely tighten the set screw (1).

4-2. Winding the lower thread

⚠ CAUTION

Do not touch any of the moving parts or press any objects against the machine while winding the lower thread, as this may result in personal injury or damage to the machine.

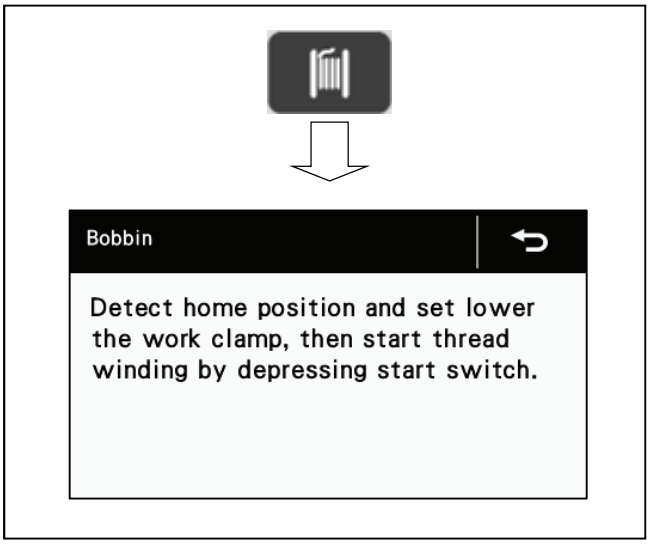

1. First, press the bobbin key on the home screen panel to switch to the bobbin screen.

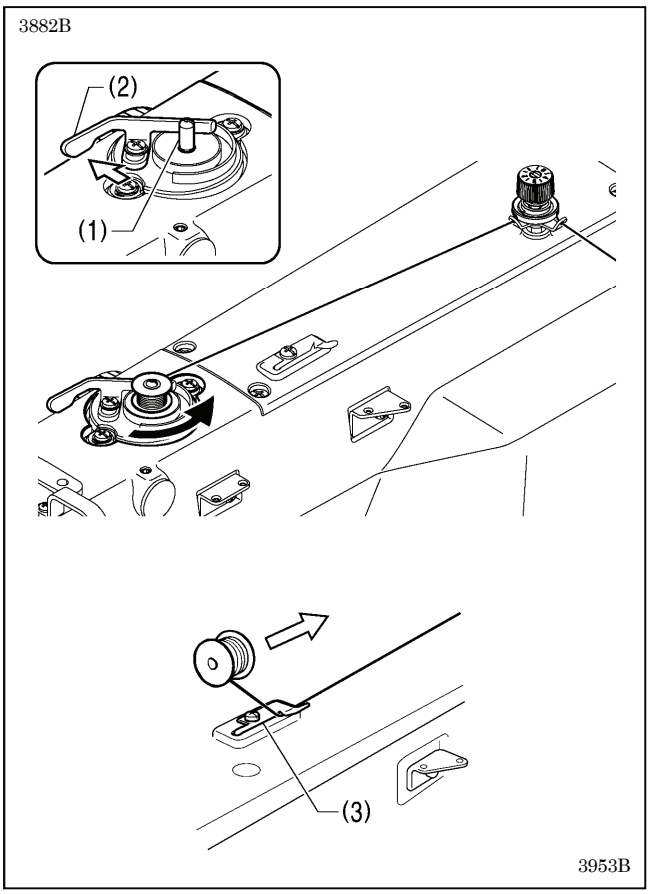

2. Place the bobbin onto the winder shaft (1).
3. Thread the thread as shown in the illustration, wind the thread around the bobbin several times, and then press the bobbin presser arm (2).
4. Depress the foot switch to the 2nd step. The feed mechanism will move to the home position.
5. Check that the needle is not touching the work clamp / button clamp, and depress the foot switch to the 2nd step.
6. After the machine starts operating, keep depressing the foot switch until the lower thread stops being wound onto the bobbin.
   (If you release the foot switch before winding is complete, and then depress it again, winding will start again.)
7. Once winding of the set amount of lower thread (80% - 90% of the bobbin capacity) is completed, the bobbin presser arm (2) will return automatically.
8. Remove the bobbin, hook the thread onto the knife (3), and then pull the bobbin in the direction of the arrow to cut the thread.

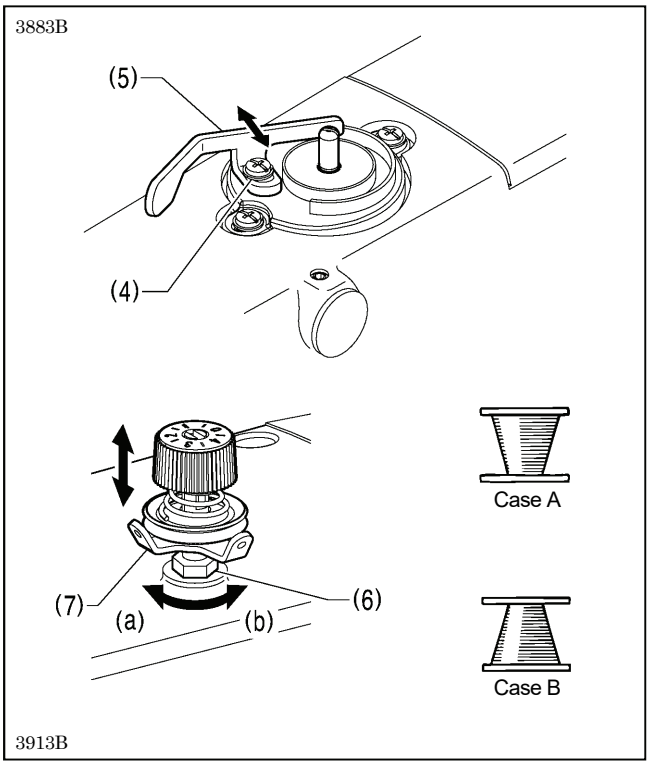

Adjusting the bobbin winding amount
Loosen the screw (4) and move the bobbin presser (5).

If the thread winds onto the bobbin unevenly
Loosen the nut (6) and move the bobbin winder tension assembly (7) up and down to adjust.
* For case A, turn the bobbin winder tension assembly (7) clockwise (a), and for case B, turn it counterclockwise (b).

4-3. Installing the bobbin case

⚠ CAUTION

Turn off the power switch before installing the bobbin case, otherwise the machine may operate if the foot switch is depressed by mistake, which could result in injury.

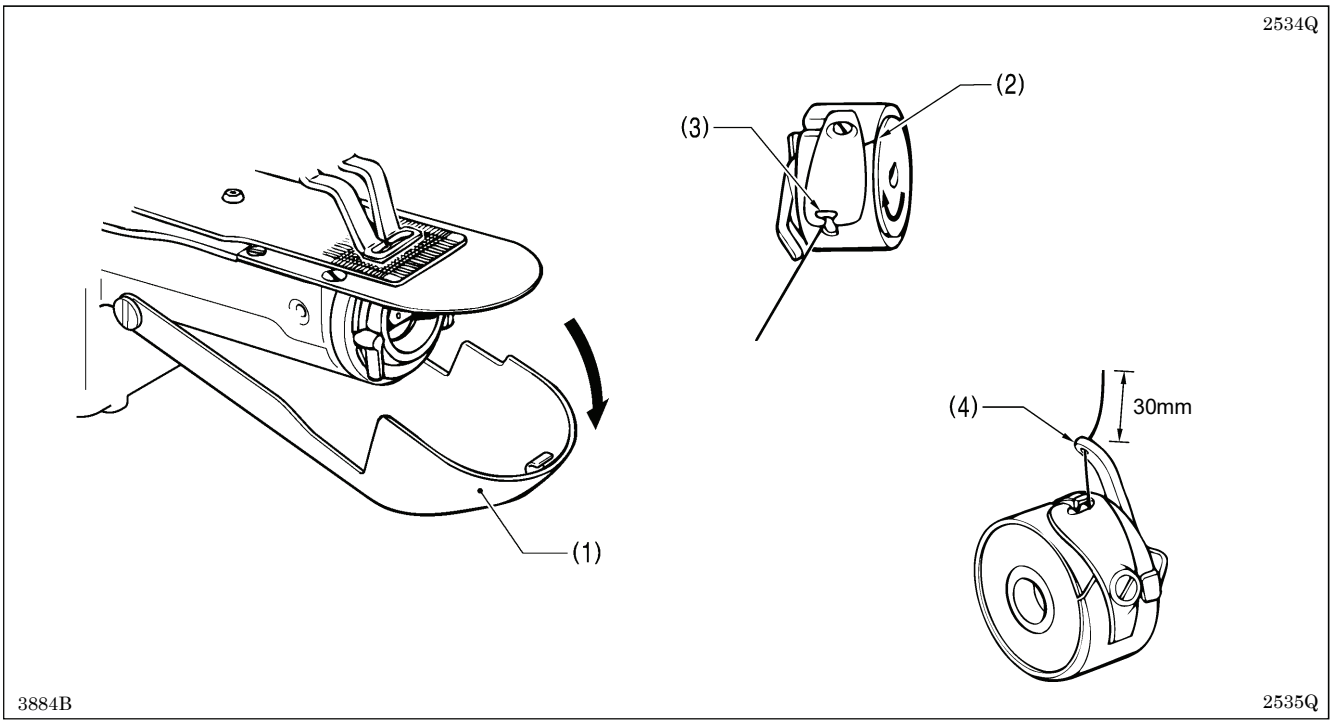

1. Pull the shuttle race cover (1) downward to open it.
2. While holding the bobbin so that the thread winds to the right, insert the bobbin into the bobbin case.
3. Pass the thread through the slot (2) and pull it out from the thread hole (3).
4. Check that the bobbin turns in the direction of the arrow when the thread is pulled.
5. Pass the thread through the lever thread hole (4), and then pull out approximately 30 mm of thread.
6. Hold the latch on the bobbin case and insert the bobbin case into the hook.

4-4. Threading the upper thread

⚠ CAUTION

Use threading mode or turn off the power first in order to carry out threading.

Thread the upper thread correctly as shown in the illustration below.

* When using threading mode for threading, the tension discs (1) will open so that the thread can be threaded more easily. (Refer to following page.)

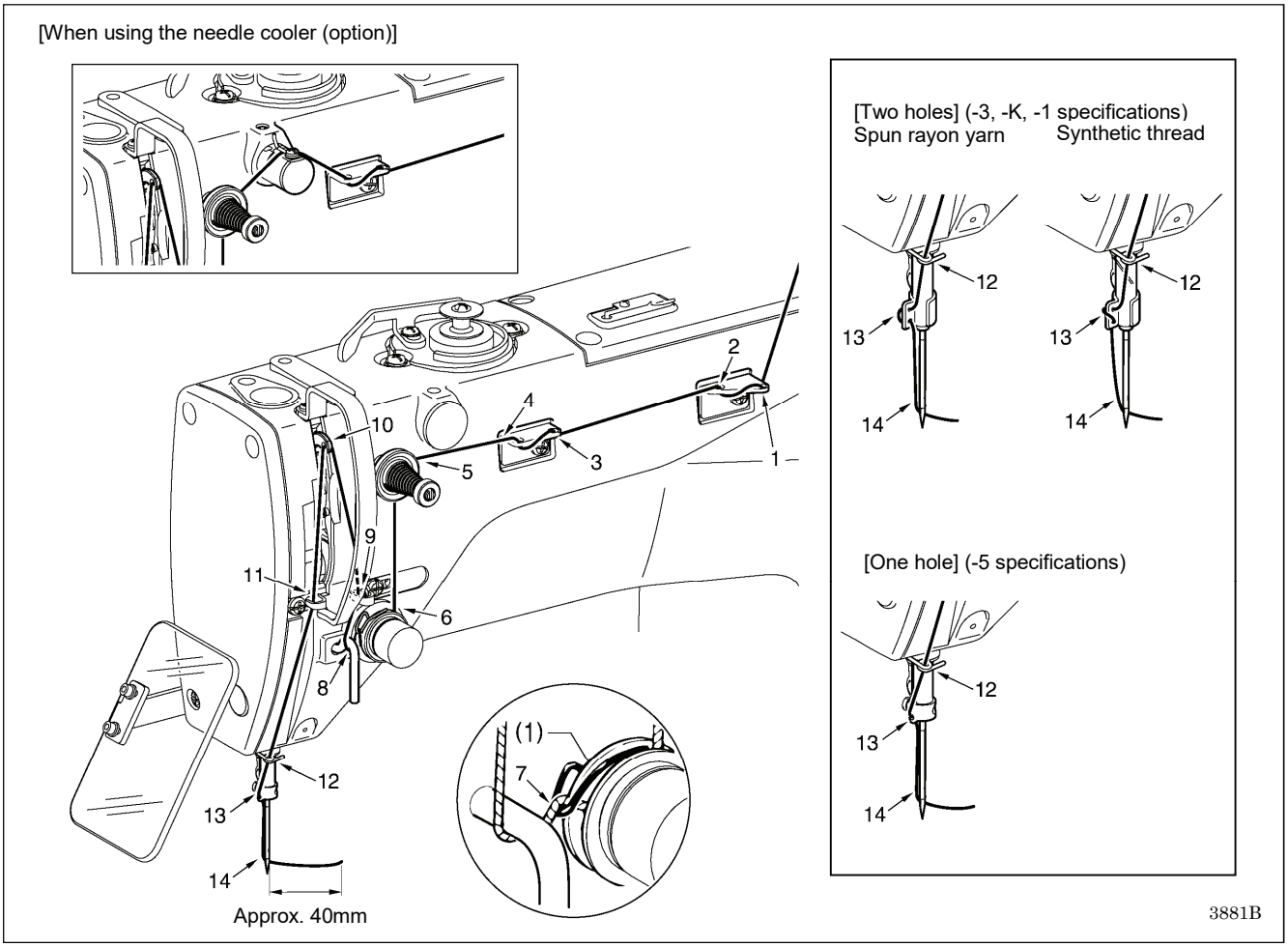

<Threading mode>
Threading mode is safe because the sewing machine will not start even when the foot switch is depressed.

1	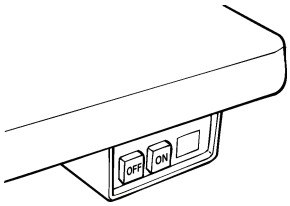 4421Q	Turn on the power switch.
2		Press the thread key. • The work clamp / button clamp will lower.
3	**Threading the thread.**	
4	**Ending threading mode**	Press the thread key. • The work clamp / button clamp will return to where it was before threading mode was started.

4-5. Thread tension

4-5-1. Lower thread tension

⚠ CAUTION

Turn off the power switch before removing or inserting the bobbin case.
The machine may operate if the foot switch is depressed by mistake, which could result in injury.

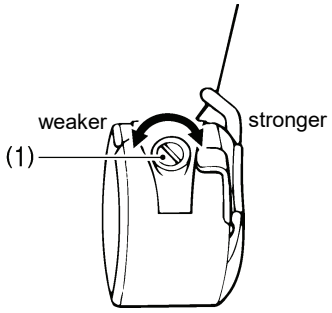

2536Q

Adjust the thread tension to the weakest possible tension by turning the thread tension nut (1) until the bobbin case will not drop by its own weight while the thread end coming out of the bobbin case is held.

4-5-2. Upper thread tension

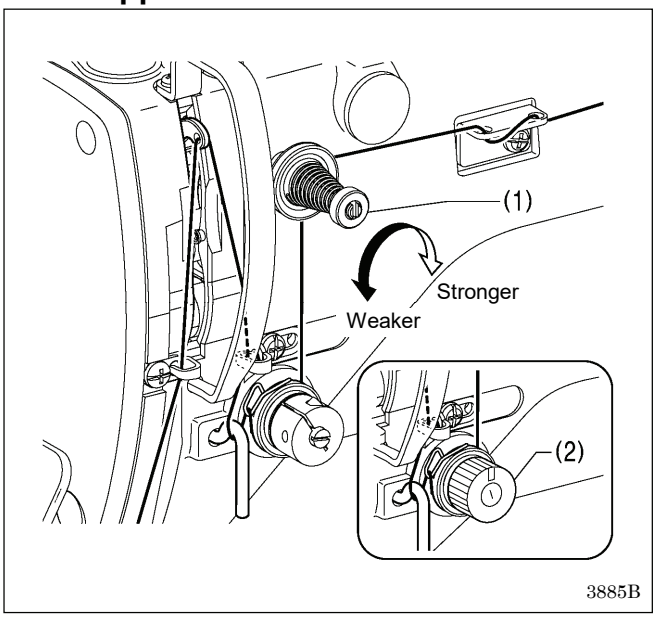

Use the digital tension or the tension nut (2) to adjust the tension as appropriate for the material being sewn. (Refer to "Setting the tension value".)

Furthermore, turn the tension nut (1) (sub-tension) to adjust the upper thread trailing length to 35 - 40 mm.

Setting the tension value
<For KE-430HX and BE-438HX>

* The tension value which has been set will be applied the next time sewing is carried out.

[Reference thread tension]

Use	KE-430HX/HS				BE-438HX/HS
	Medium-weight materials (-03)	Knitted wear (-0K)	Light-weight materials (-01)	Heavy-weight materials (-05)	
Upper thread	#50 or equivalent	#60 or equivalent	#60 or equivalent	#30 or equivalent	#60 or equivalent
Lower thread	#50 or equivalent	#80 or equivalent	#60 or equivalent	#50 or equivalent	#60 or equivalent
Upper thread tension (N) [Tension value] *1	0.8 - 1.2 [80 - 120]*2			1.2 – 1.8 [70 - 130]*2	0.5 - 1.2 [50 - 150]*2
Lower thread tension (N)	0.2 - 0.3				0.2 - 0.3
Pre-tension (N)	0.05 - 0.3				0.1 - 0.4
Needle	DP x 5 #14	DP x 5 #9	DP x 5 #14	DPx17NY#19	DPx17NY#12

*1: For KE-430HX and BE-438HX.
*2: This is the tension value when the pretension is 0.05 N.

[Guide to maximum sewing speed for KE-430HX/HS]

Use	Max. sewing speed (sti/min)	
	Standard hook	Large hook
8 layers of denim	3,300	2,500
12 layers of denim	2,700	
Ordinary materials	2,700	2,500
For knitted materials and light-weight materials	2,500	

NOTE:
The thread may break due to heat under some sewing conditions. If this happens, reduce the sewing speed, or use the needle cooler (option).

4-6. Adjusting the needle cooling equipment (KE-430HX)

When securing the air nozzle assembly, change the height depending on the needle count.

* The height is adjusted at the time of shipment from the factory.
  If the needle count is changed, adjust while referring to below.

・DPx5 (KE-430HX-3, -K, -1, KE-430HS-3): Push the air nozzle assembly upward so that the open part of the slot is at the top.

・DPx17 (KE-430HX-5, KE-430HS-5, BE-438HX, BE-438HS): Push the air nozzle assembly downward so that the open part of the slot is at the bottom.

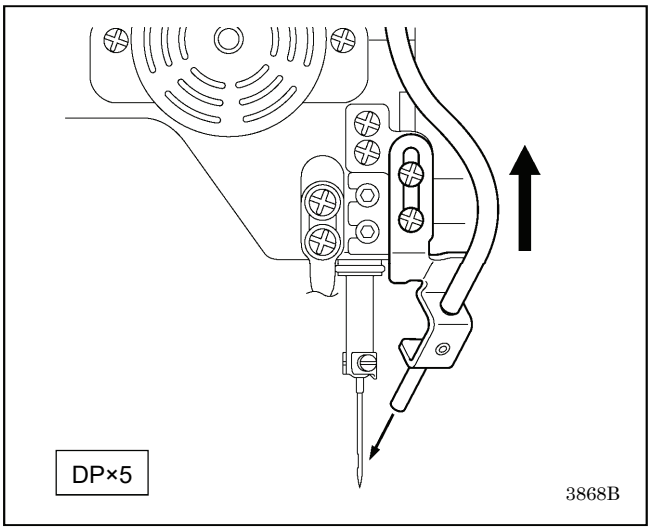

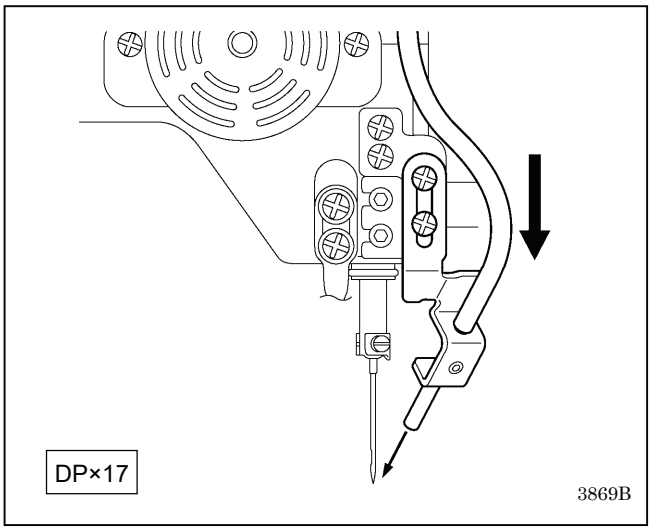

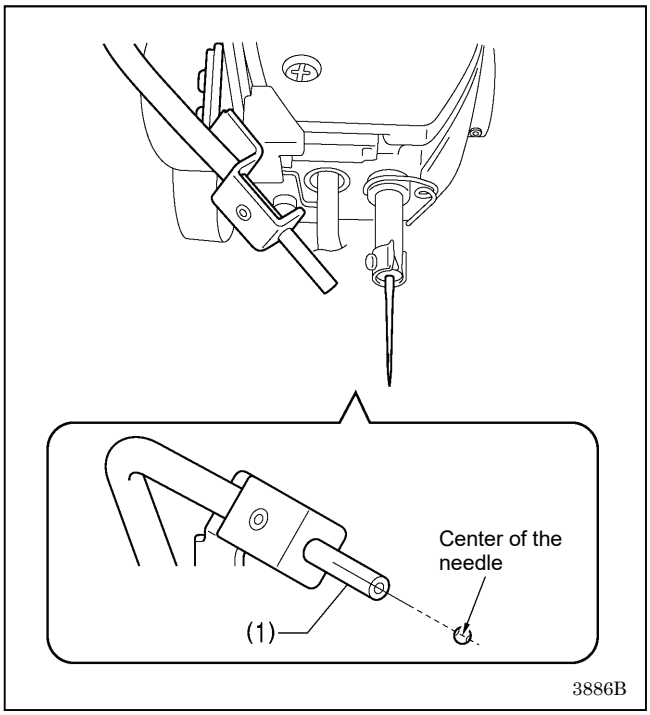

1. Turn on the power switch.
2. Depress the foot switch to the 2nd step.
   The feed mechanism will move to the home position.
3. While sewing a suitable program, depress the foot switch to the 2nd step to complete one cycle of operation.
4. Turn off the power switch.
5. Check that the center of the needle is aligned with the extension line from the air nozzle assembly (1) at the needle bar stop position.
   * Check that the extension line passes through the threading hole of the needle at this time.

NOTE:
If the center of the needle is not aligned with the extension line from the air nozzle assembly at the needle bar stop position, the needle cooling may not function effectively.

4-7. Thread nipper device (KE-430HX-03, -0K, -01)

This is used to stop the thread from pulling out at the sewing start, and at times when skipped stitches might easily occur.
The thread nipper device operates when memory switch no. 500 is set to "ON". However, some limitations apply. Refer to "6-2. List of memory switches" for details.
* The default setting for this memory switch is "OFF".

[Notes on use]

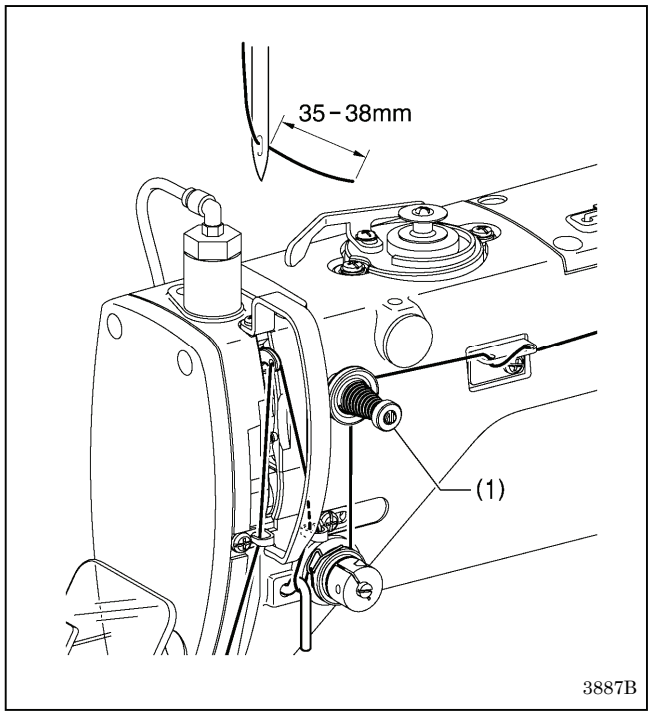

1. When using the thread nipper device, turn the tension nut (1) (sub-tension) to adjust the upper thread trailing length to 35 - 38 mm.
   * Adjust the upper thread trailing length to less than 40 mm after replacing the upper thread also.

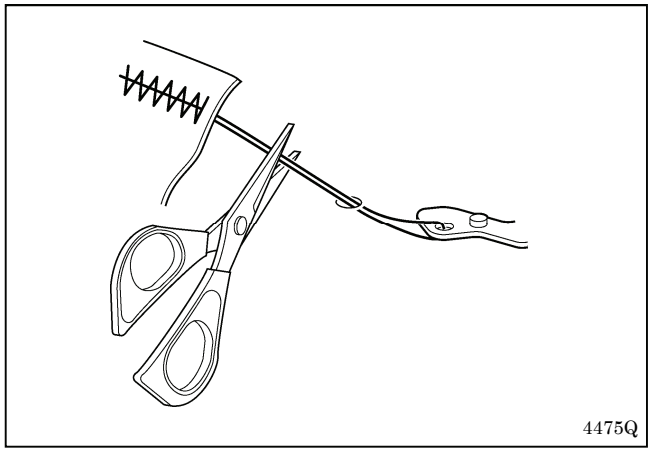

2. If the upper thread trailing length is 40 mm or more, or if the upper thread tension is weak and the upper thread does not form a good seam at the first stitch, the end of the thread that is being held by the thread nipper may become wound around the seam.
   Furthermore, if using thick thread that is #30 or higher or if the thread trailing length is too long, an error "E692" may occur.
   In any of these cases, use scissors to cut the thread without pulling it up too hard.

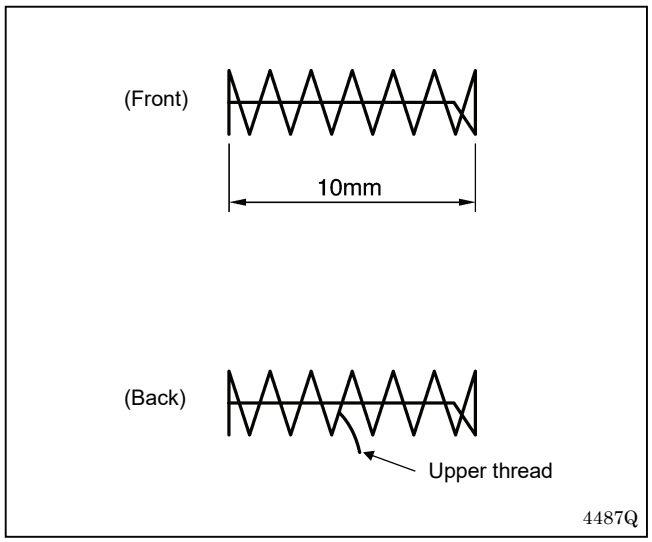

3. For sewing patterns with a short bar tack length (10 mm or less), the end of the thread that is being held by the thread nipper may poke out from the seam on the underside of the material. It is recommended that you change the thread nipper setting to "OFF" for patterns such as these.
4. If error "E690" or "E692" frequently occurs, remove the needle plate and remove any thread scraps from underneath the needle plate.

5. With the KE-430HX, the lower thread may poke out from the underside of the material on the 2nd stitch for some types of material and thread. If this happens, it is recommended that you use sewing patterns that are designed for use with the thread nipper device.
   Refer to "2-2. List of sewing patterns (KE-430HX/HS)" for details of the sewing patterns.

<Program No. Reference Table>

Specifications	Standard pattern No.	Pattern No. for thread nipper device
For medium-weight materials (-03)	1	65
	4	66
	5	67
	8	68
	13	69
	15	70
	20	71
	21	72
For heavy-weight materials (-05)	2	78
	3	79
	6	80
	14	81
	16	82
	17	83
	18	84
	19	85
For knitted wear (-0K) For light-weight materials (-01)	7	73
	9	74
	22	75
	31	76
	32	77

4-8. Inserting a button (BE-438HX/HS)

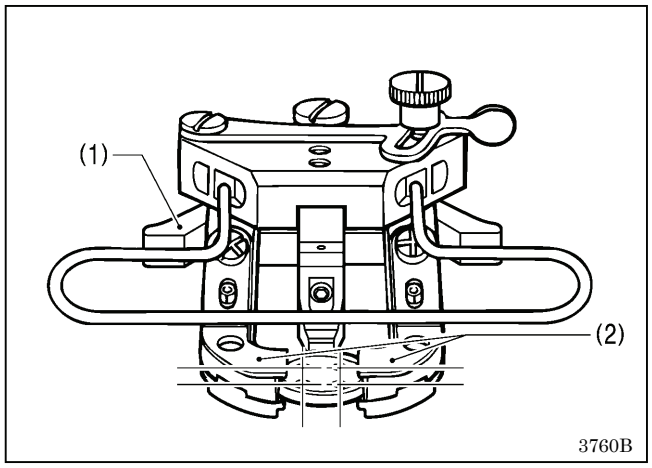

1. Press the button clamp plate cam (1) to open the button clamp (2).
2. Insert a button, making sure that the button is facing the directing shown in the illustration, then release the button clamp plate cam (1).

4-9. Adjusting the button clamp (BE-438HX/HS)

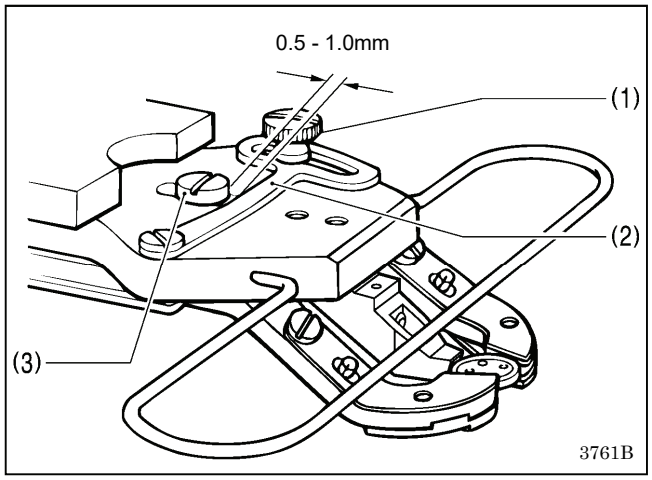

1. Insert a button in the button clamp, and then confirm that the button is securely held by the clamp and that the button can be turned by hand.
2. Loosen the shoulder screw (1), while the button is held by the clamp. Move the adjusting plate (2) so that the space between the adjusting plate (2) and screw (3) is approximately 0.5 - 1.0 mm, then tighten the shoulder screw (1).

4-10. About the button lifting method (BE-438HX/HS)

4-10-1. Selecting the button clamp spacer

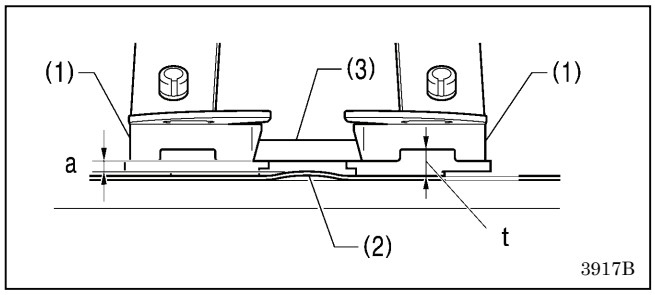

The button lift amount can be adjusted in order to change the clearance (a) between the material (2) and the button (3) by changing the thickness (t) of the button clamp spacer (1). However, if the button lift amount is increased, it may cause the thread to pull out under some sewing conditions.

<List of button clamp spacers (optional parts)>

Thickness t (mm)	Part name	Left/Right	Notes
2.5	Button clamp spacer AL	Left	
	Button clamp spacer AR	Right	
(3)	Button clamp spacer BL	Left	* Standard part
	Button clamp spacer BR	Right	* Standard part
3.5	Button clamp spacer CL	Left	
	Button clamp spacer CR	Right	
4	Button clamp spacer DL	Left	
	Button clamp spacer DR	Right	

4-10-2. Installing the button lifter spring

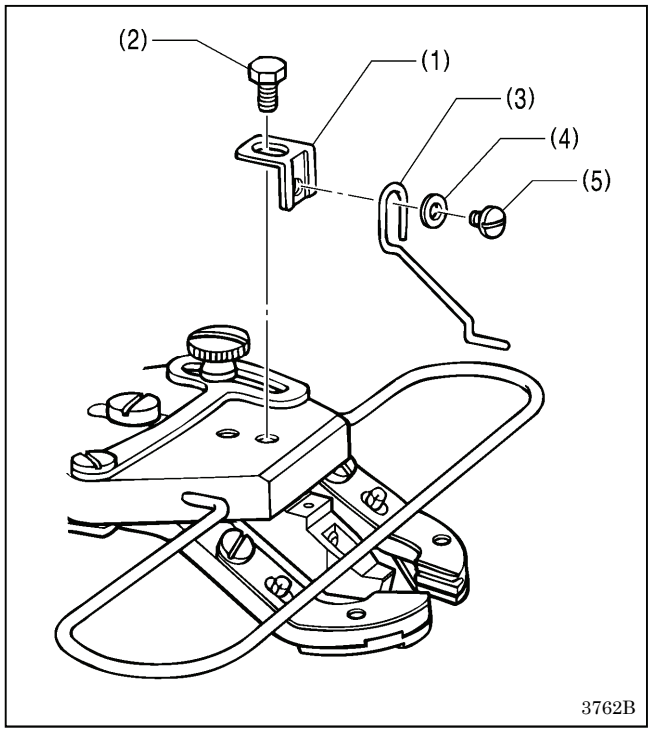

If you would like the button to be raised up more after it is sewn without replacing the button clamp spacer, install the accessory button lifter spring.

1. Install the spring support (1) with the bolt (2).
2. Install the spring (3) with the washer (4) and the screw (5).
   * Adjust so that the spring (3) is in the middle of the button.

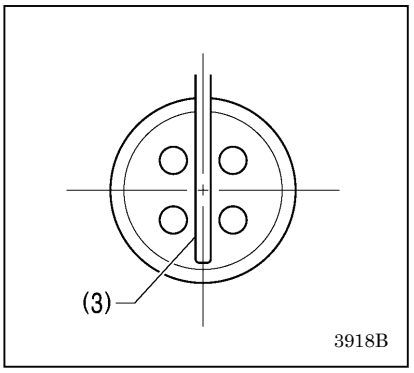

5. USING THE OPERATION PANEL (BASIC OPERATIONS)

⚠ CAUTION

To prevent problems, do not use objects with sharp points to operate the operation panel.

5-1. Name and function of each operation panel item

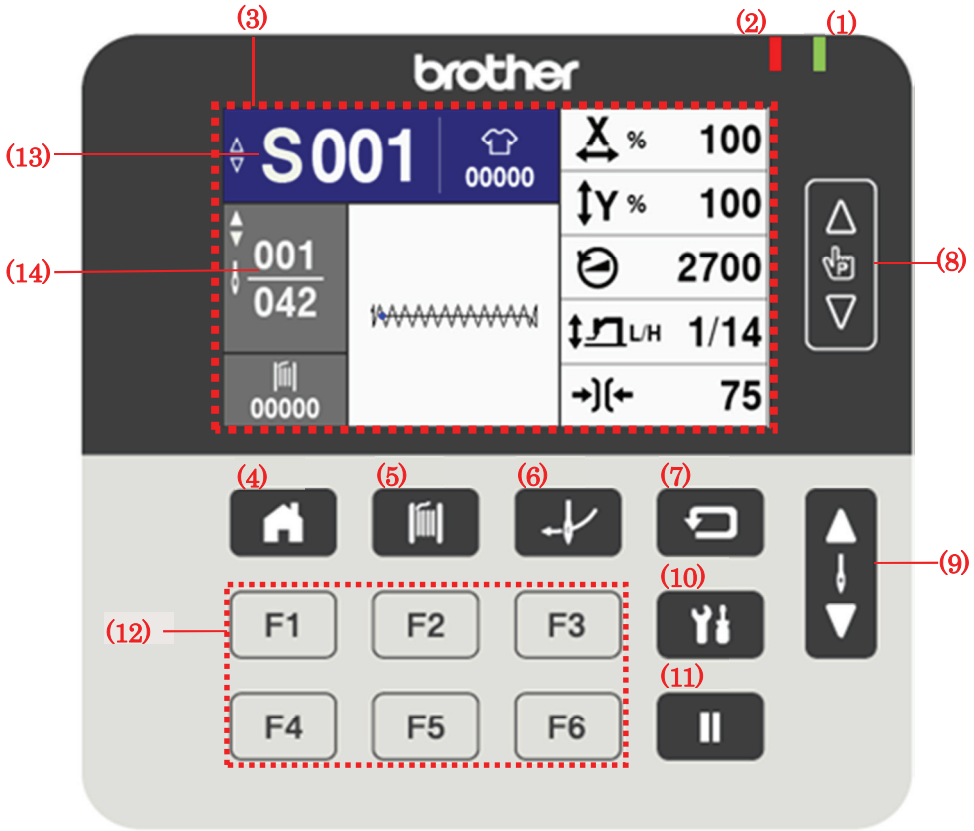

(1) Power supply LED

Illuminates when the power switch is turned on.

(2) Caution LED

Illuminates or blinks when an error occurs.

(3) Touch panel (display)

This displays messages and touch keys (icons).

(4) Home key

Used to switch to the home screen.

(5) Bobbin key

Used to switch to thread winding mode.

(6) Thread key

Used to switch to threading mode.

(7) Test key

Used to switch to test mode.

(8) Change program No. key △ ▽

Used to change the value which is displayed in the program No. display (13).

(9) Change stitch count key ▲ ▼

Used to change the value which is displayed in the stitch count display (14).

(10) Menu key

Used to switch to the setting menu screen.

(11) Pause key

Used to momentarily pause sewing operation.

(12) Function keys [F1, F2, F3 and F4]

Used to directly select program numbers. Detailed functions are given in "6-7. Direct selection".

(13) Program No.

The sewing program number which is selected is displayed.

Touch to switch to the select program screen, and then select a program.

(14) Stitch count

The number of stitches in the selected sewing program is displayed in "Current number of stitches in sewing program"/"Total number of stitches in sewing program".

5-2. Home screen

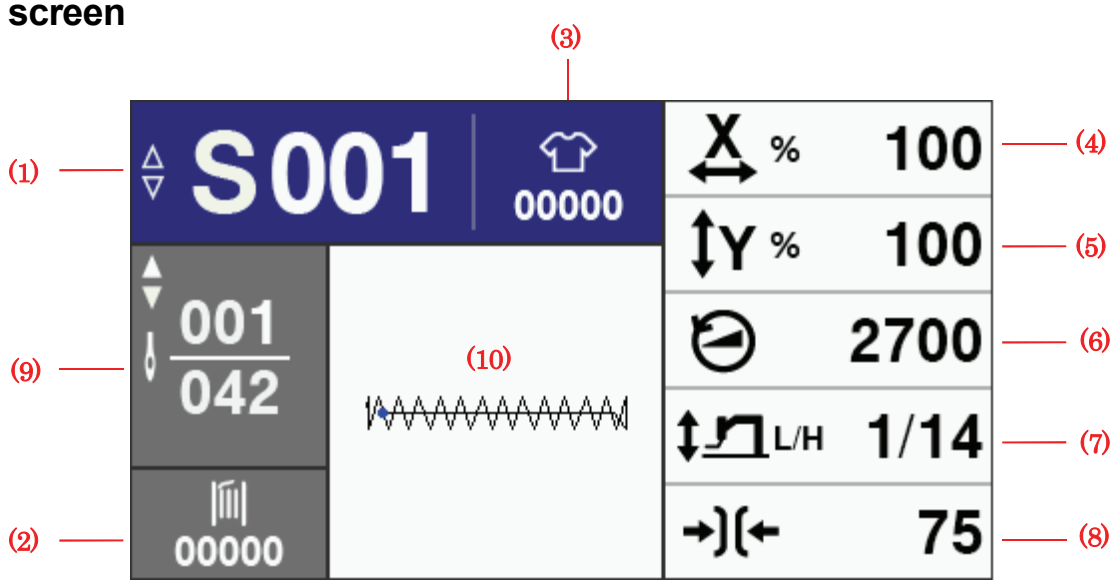

(1)	Program No.	Touch the screen to switch to the select program screen, and then select a program.
(2)	Lower thread counter setting	When you touch the screen, the display switches to the lower thread counter setting screen, and you can then set the lower thread counter.
(3)	Production / garment counter setting	When you touch the screen, either the production counter or garment counter display is set. Other than cycle programs Switches to the production counter setting screen. Cycle programs Depending on the setting for memory switch No. 300: If the "Production counter" is displayed, the screen switches to the production counter setting screen. If the "Garment counter" is displayed, the screen switches to the garment counter setting screen.
(4)	X scale setting	When you touch the screen, the display switches to the X scale setting screen so that you can change the X scale. For cycle programs, the screen is for display only, and touching it will have no effect.
(5)	Y scale setting	When you touch the screen, the display switches to the Y scale setting screen so that you can change the Y scale. For cycle programs, the screen is for display only, and touching it will have no effect.
(6)	Sewing speed setting	When you touch the screen, the display switches to the speed setting screen so that you can change the sewing speed.
(7)	Clamp height setting	When you touch the screen, the display switches to the work clamp height setting screen so that you can change the work clamp height. For cycle programs, the screen is for display only, and touching it will have no effect. It is displayed as "Intermediate height/Maximum height".
(8)	Tension value setting	When you touch the screen, the display switches to the digital tension value setting screen so that you can change the digital tension value. This is not displayed for the 430HS or 438HS.
(9)	Number of stitches	The number of stitches is displayed in "Current number of stitches in sewing program"/"Total number of stitches in sewing program".
(10)	Sewing pattern	An overall image of the sewing pattern and the sewing start position (blue point) are displayed.

5-3. Program selection method

You can use a standard program which has already been registered and additional programs which have been registered to create user programs and cycle programs.

<A. When selecting at the home screen>

1 **Use the hardware keys.**

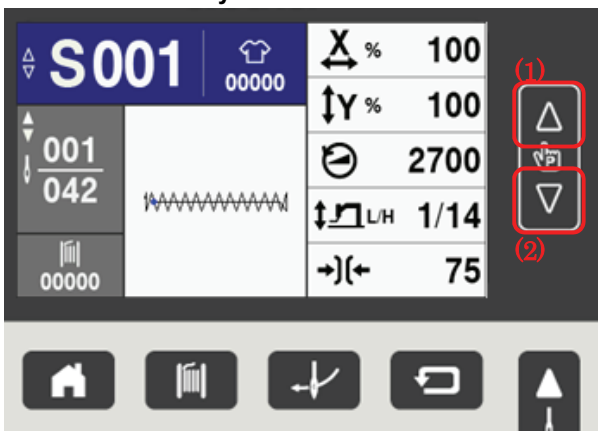

Press the change program No. keys △ (1) or ▽ (2) to select a sewing program.

- Program numbers which have no pattern registered in them will be skipped.

<B. When selecting at the select program screen>

1 **Switch to the select program screen.**

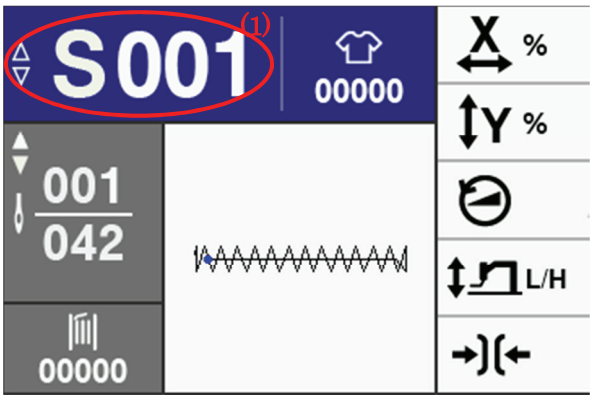

Touch the sewing program number (1) to switch to the select program screen, and then select a program.

- If a pattern has been registered in a program, the detail of the pattern is displayed in the list as follows: "program number" (X: "X scale" Y: "Y scale" / "base program number").
- If no pattern has been registered, a program number will not be displayed.

2 **Select a program number.**

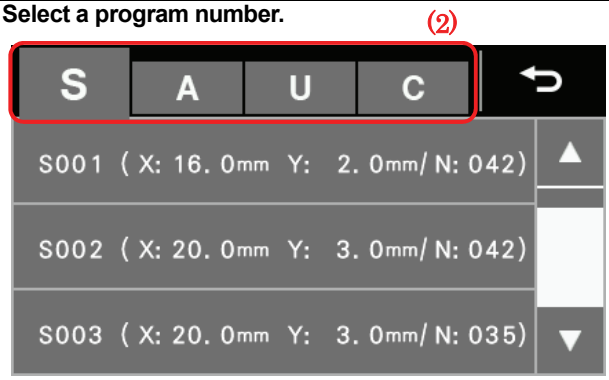

Select the program number from the list on the select program screen, and then touch the screen to return to the home screen. The selected program number will be displayed.

- You can touch the tab (2) on the screen to switch to a list of the respective programs.
- S : Standard program
- A : Additional program
- U : User program
- C : Cycle program

Restrictions due to program numbers selected

	Standard program	Additional, user and cycle program
Program No.	S001 to S089 (430HX/HS) S001 to S064 (438HX/HS)	A001 to A500 U001 to U100 C001 to C030
Pattern selection operation	Not possible	Can be registered as desired
Patterns that can be registered	Patterns with same number as program number already registered	All patterns registered in the sewing machine

5-4. X scale and Y scale setting method

X scale and Y scale are always displayed on the home screen during sewing standby mode, and they can be changed at any time.

<A. X scale settings>

The changes made at this time will be reflected in each program, so this is a useful way of changing programs while checking actual sewing.

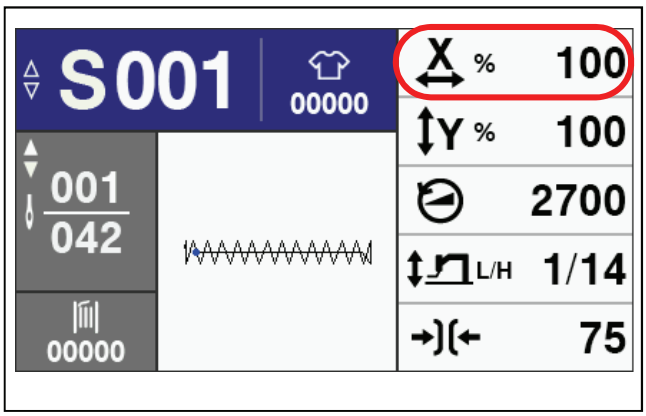

1. Touch the X scale on the home screen to switch to the X scale setting screen.

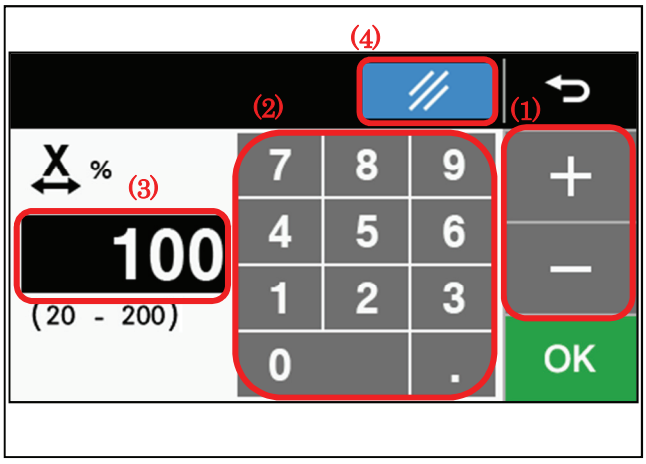

2. Touch the + or − key (1), or touch the numeric keypad keys (2) to change the X scale value (3).

3. Touch the reset key (4) to set the initial value (*1).

4. Touch the OK key OK.
   - Touch the OK key to switch to the home screen, and the X scale value which is set will be applied from the next time sewing is carried out.

* Initial value is 100%.
* The setting can be displayed in "mm" units by setting memory switch No. 402 to "ON".
* When the value is confirmed, the buzzer will sound twice if the value exceeds the allowable scale (20% to 200%), and the setting will not be applied.

<B. Y scale settings>

The changes made at this time will be reflected in each program, so this is a useful way of changing programs while checking actual sewing.

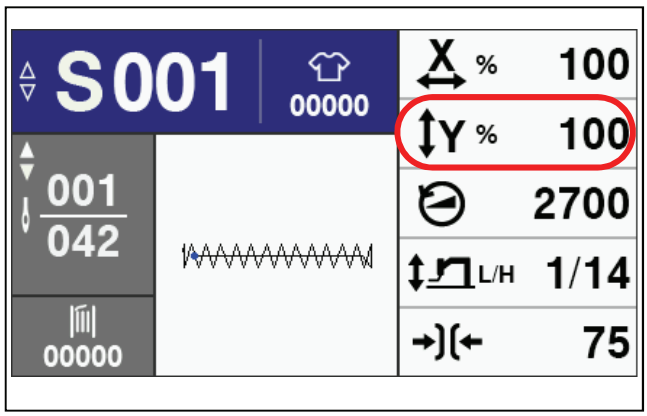

1. Touch the Y scale on the home screen to switch to the Y scale setting screen.

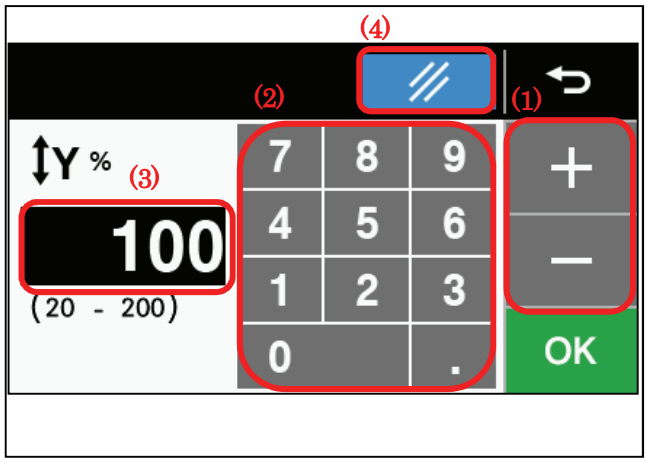

2. Touch the + or − key (1), or touch the numeric keypad keys (2) to change the Y scale value (3).

3. Touch the reset key (4) to set the initial value (*1).

4. Touch the OK key OK.
   - Touch the OK key to switch to the home screen, and the Y scale value which is set will be applied from the next time sewing is carried out.

* Initial value is 100%.
* The setting can be displayed in "mm" units by setting memory switch No. 402 to "ON".
* When the value is confirmed, the buzzer will sound twice if the value exceeds the allowable scale (20% to 200%), and the setting will not be applied.

5-5. Sewing speed setting method

The sewing speed is always displayed on the home screen during sewing standby mode, and it can be changed at any time.

The changes made at this time will be reflected in each program, so this is a useful way of changing programs while checking actual sewing.

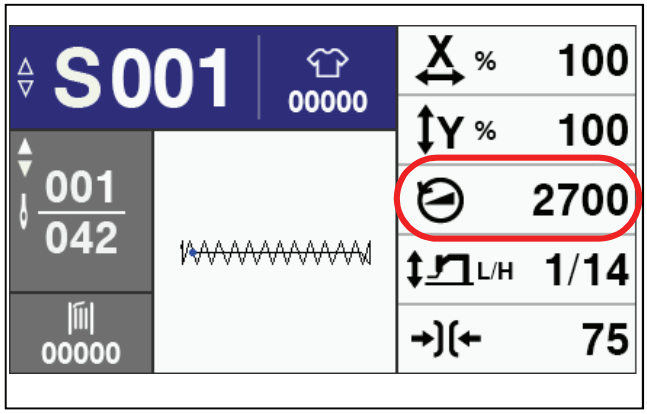

1. Touch the sewing speed value on the home screen to switch to the sewing speed setting screen.

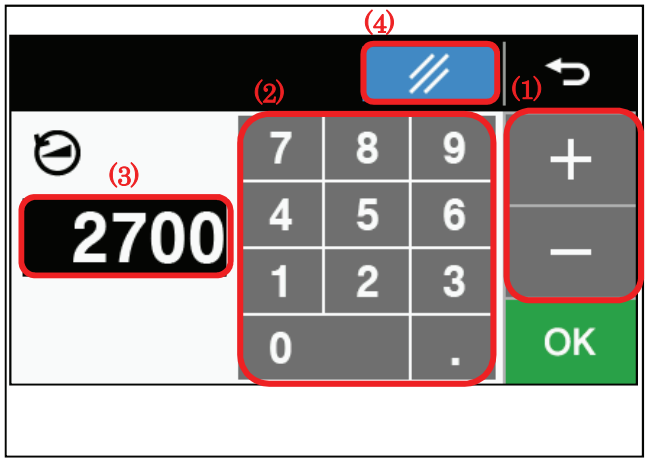

2. Touch the + or − key (1), or touch the numeric keypad keys (2) to change the sewing speed value (3).
3. Touch the reset key (4) to set the initial value (*1).
4. Touch the OK key OK.
   - Touch the OK key to switch to the home screen, and the sewing speed value which is set will be applied from the next time sewing is carried out.

* Initial value differs depending on a sewing machine model.
  430HX/HS: 2,700 sti/min, 438HX/HS: 2,300 sti/min
* When the value is confirmed, the buzzer will sound twice if the value exceeds the allowable setting range (For 430HX/HS: 3,300 sti/min; for 438HS/HX: 2,800 sti/min), and the setting will not be applied.

5-6. Work clamp height setting method

The work clamp height is always displayed on the home screen during sewing standby mode, and it can be changed at any time.

If the work clamp height is changed, the same change will be applied to all programs.

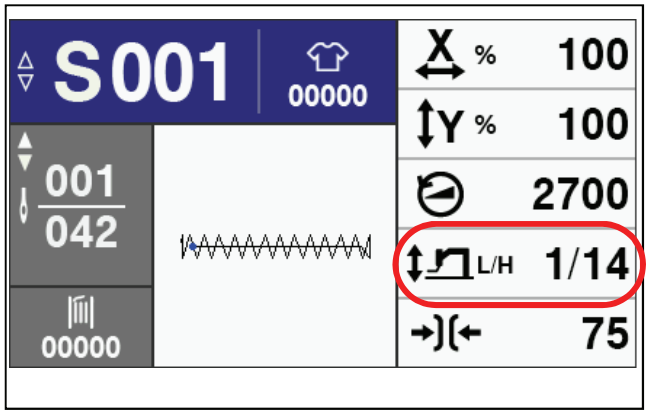

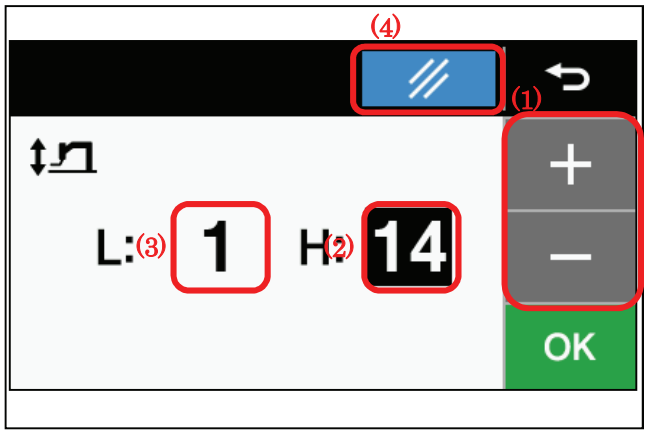

1. Touch the work clamp height value on the home screen to switch to the work clamp height setting screen.
2. Touch the setting value to be changed depending on whether the item to be edited is the maximum height "H:" (2) or the intermediate height "L:" (3). The value for the selected item to be edited will be highlighted.
3. Touch the + or − key (1) to change the work clamp height (2) or (3).
4. Touch the reset key (4) to set the initial value (*1).
5. Touch the OK key OK to confirm the value.
6. When the settings have been completed, touch the back key or home key to switch to the home screen.

- When the OK key is touched, the work clamp height value which is set will be applied from the next time sewing is carried out.

It is possible to change the value of intermediate work clamp height (L) only when memory switch No. 071 is set to "2" or memory switch No. 072 is set to "2" or "5".

If you would like to change the work clamp height separately for each program, set memory switch No. 470 to "ON".

* Initial value differs depending on the sewing machine model.

Maximum work clamp height: 430HX/HS: 14, 438HX/HS: 10

Intermediate work clamp height: 430HX/HS: 1, 438HX/HS: 1

5-7. User program setting method

Patterns, X scale, Y scale, sewing speed and work clamp height can be registered into programs.
When a program number is selected, the pattern which has been set for that number can then be sewn.
Standard program numbers S001 to S089 (S001 to S064 for the 438HX/HS) have patterns preprogrammed into the program numbers with the same numbers as the pattern numbers, and these pattern numbers cannot be changed.
All items in user program numbers U001 to U100 and additional program numbers A001 to A500 can be set as desired by the user.

1 **Switch to the user program setting screen.**

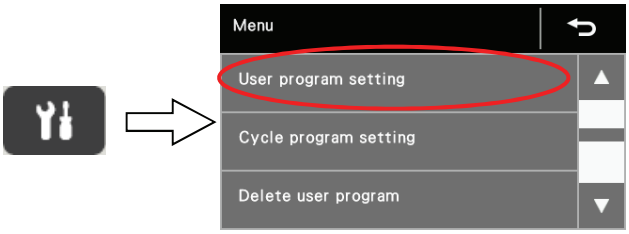

Press the menu key to switch to the setting menu screen. Touch "User program setting" in the menu to switch to the select user program screen.

- If the pattern has been registered in a program, the "Program No." (X: "X scale", Y: "Y scale" / "Base program No." will be displayed in the list; if it has not been registered in a program, "---" will be displayed below the program number.

2 **Select a program number that you would like to change the parameter for.**

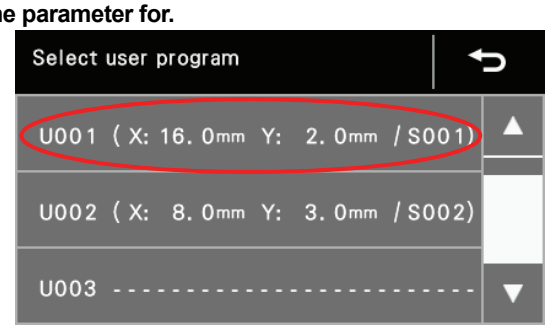

For example, program number U001

Set the program number that you would like to register from the on-screen list.

- Touch the back key or the menu key to return to the setting menu screen.

Restrictions due to program type selected

	Standard program	User and additional program
Program No.	S001 to S089 (430HX/HS) S001 to S064 (438HX/HS)	U001 to U100 A001 to A500
Pattern selection operation	Not possible	Can be registered as desired
Patterns that can be registered	Patterns with same number as program number already registered	All patterns registered in the sewing machine

3 **(If a program number from U001 to U100 is selected) Register the pattern.**

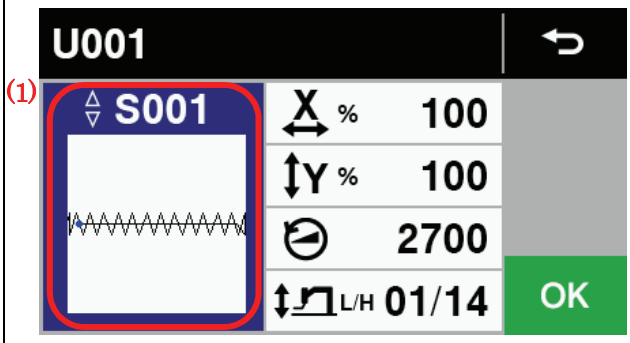

Press the △ or ▽ key to select the program, or touch the sewing program number or the pattern image (1) to switch to the select program screen, and select the program.

or

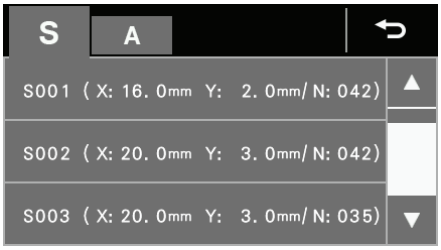

- The setting ranges for other items will vary in accordance with the pattern which is registered, so register the pattern first.

4 **Select an item to be changed.**

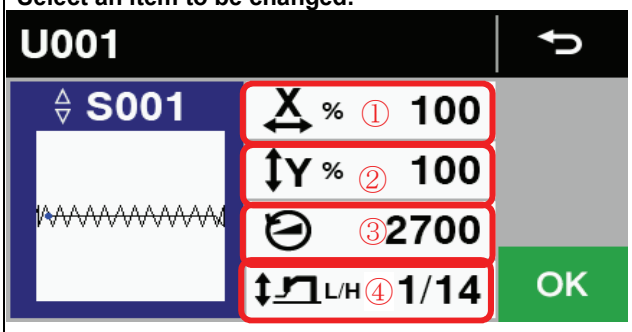

①X scale ②Y scale ③Sewing speed ④Work clamp height

Touch the item to be changed.

5 **Change the setting for the parameter.**
(Refer to "List of items" on the next page for details on parameter changes.)

Example: X scale setting

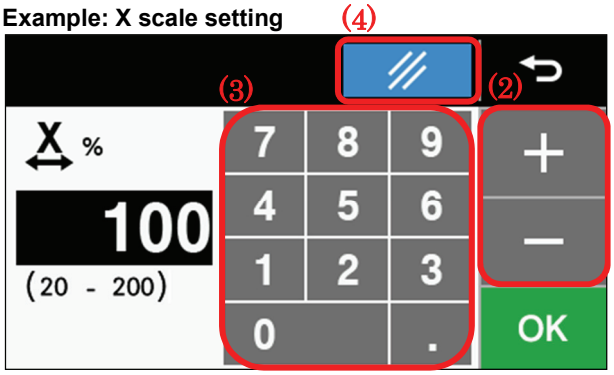

Touch the + or − key (2), or touch the numeric keypad keys (3) to change the parameter setting.

- You can make the initial setting appear in the display by pressing the reset key (4).

6 **Apply the changed parameter setting.**

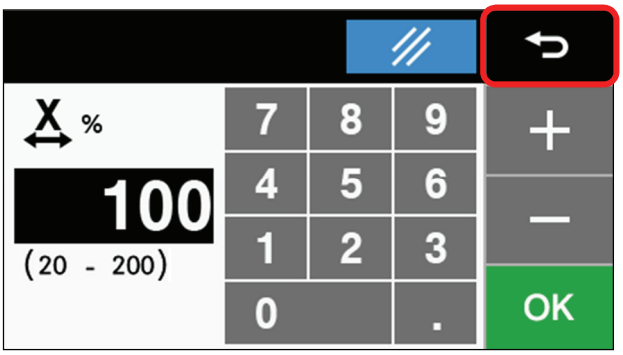

Touch the OK key OK.

- The display will return to the user program editing screen, and the edited parameters will be applied.
- If you press the return key (5) without pressing the OK key, you can cancel the parameter changes.

7 **Repeat steps 4 to 6 to register the settings for each item.**

8 **Register the settings for the user program.**

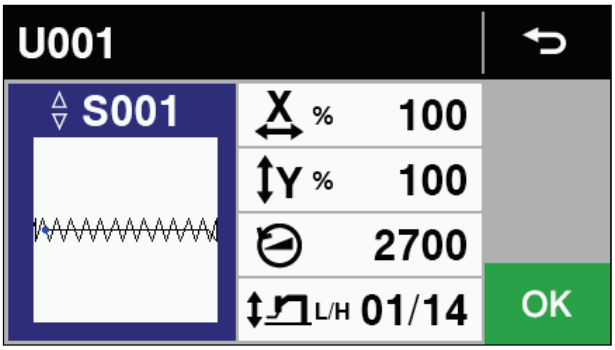

Once all the items have been set, touch the OK key OK in the user program editing screen.

- The display will return to the select user program screen, and the program which was set will be registered.
- If you press the return key without pressing the OK key, you can return to the select user program screen and cancel the changes to parameter settings.

9 **If you would like to continue another program, repeat steps 2 to 8 above.**

<List of items>

Item	Setting range and initial value	Display
Pattern	Standard programs and additional programs which have already been registered can be selected. Touch the tabs at the top of the screen to switch between the standard program and additional program lists. ・ Standard program [Program No.S001 to S089 (S001 to S064 for the 438HX/HS)] ・ Additional program [Program numbers A001 to A500] (These are programs which have been added to memory from an external USB source or by using the program copy function.) * If there are no additional programs which have been registered, there will be no response when this tab is touched.	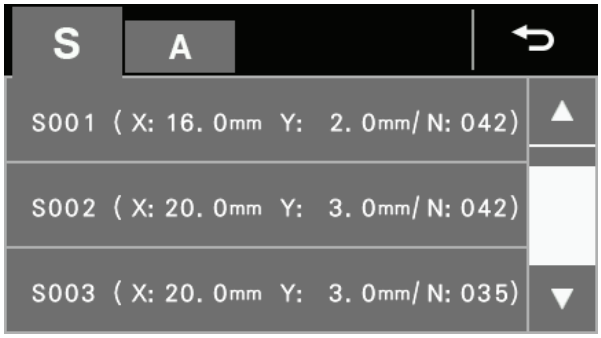
X scale	20% - 200% (Limited by available sewing area.) (Initial value is 100%.) * The setting can be displayed in "mm" units by setting memory switch No.402 to "ON".	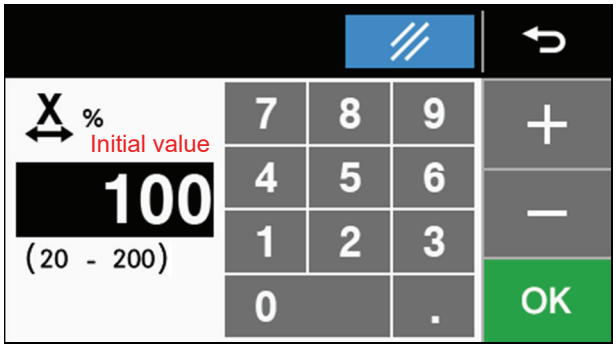
Y scale	20% - 200% (Limited by available sewing area.) (Initial value is 100%.) * The setting can be displayed in "mm" units by setting memory switch No.402 to "ON".	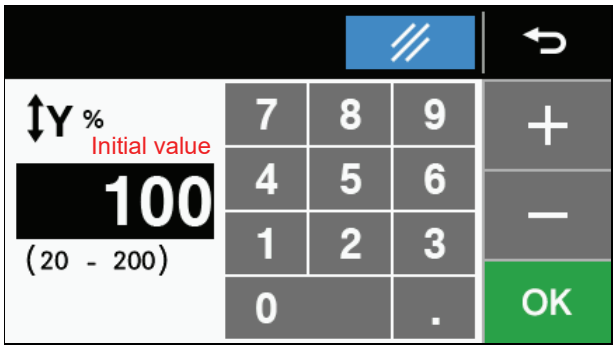
Sewing speed	430HX/HS: 200 sti/min to 3,300 sti/min 438HX/HS: 200 sti/min to 2,800 sti/min The setting is in units of 100 sti/min. (Initial value: 2,700 sti/min for the 430HX/HS 2,300 sti/min for the 438HX/HS)	

Work clamp height	430HX/HS: Intermediate work clamp height (L): 1(mm) to 17(mm) (Initial value is 1.) Maximum work clamp height (H): 10(mm) to 17(mm) (Initial value is 14.) 438HX/HS: Intermediate work clamp height (L): 1(mm) to 13(mm) (Initial value is 1.) Maximum work clamp height (H): 6(mm) to 13(mm) (Initial value is 10.) * It is possible to change the value of intermediate work clamp height (L) only when memory switch No. 071 is set to "2" or memory switch No.072 is set to "2" or "5". 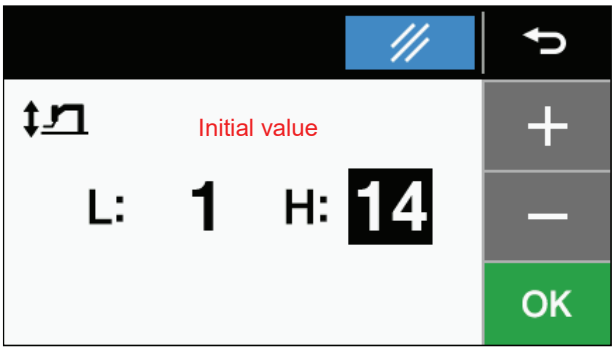

5-8. Slow start pattern setting method

The starting-up speed at the sewing start can be adjusted by setting a slow start pattern.

* When memory switch No. 100 is OFF, slow start cannot be set.

* The smaller the number, the slower the start.

* This is used to stop the thread from pulling out at the sewing start, and at times when skipped stitches might easily occur.

1 **Switch to the slow start setting screen.**

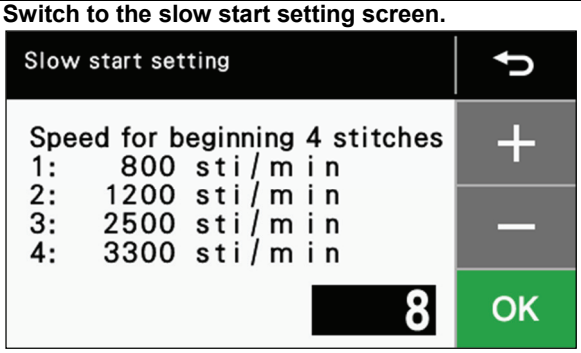

Touch the menu key to switch to the setting menu screen. Touch "Slow start setting" in the menu to switch to the slow start setting screen.

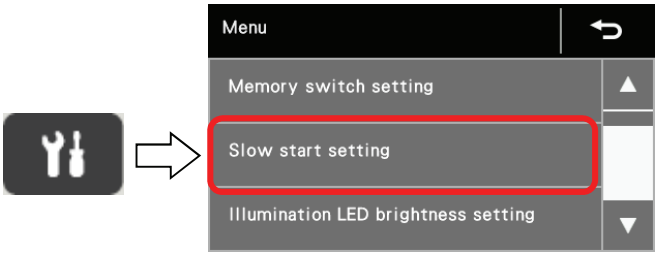

2

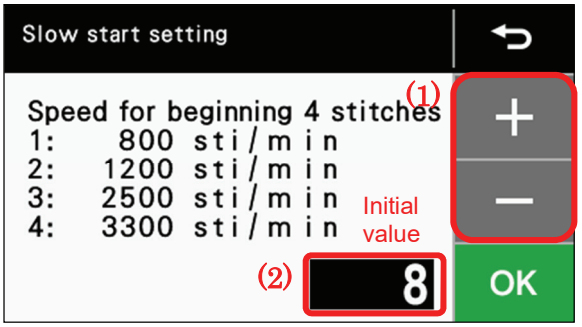

You can touch the + or − key (1) to change the slow start pattern (2).
(Initial value: 430HX/HS: 8, 438HX/HS: 7)

Once the setting is competed, touch the OK OK key on the setting screen.

- Touch the OK key to switch to the setting menu screen, and the slow start setting value which is set will be applied from the next time sewing is carried out.

Slow start pattern

1. Slow start is set as shown in the following table.
2. You can change the starting-up speed by changing the slow start pattern.

430HX/HS: Mediun-weight materials (-03), knitted wear (-0K), light-weight materials (-01)

	1	2	3	4	5	6	7	8	9
Sewing speed for the 1st stitch	200	200	300	400	400	400	400	800	1,500
Sewing speed for the 2nd stitch	200	300	400	400	500	600	800	1,200	3,000
Sewing speed for the 3rd stitch	300	400	500	600	800	800	1,200	2,500	3,300
Sewing speed for the 4th stitch	500	600	700	900	1,200	1,200	2,500	3,300	3,300

(sti/min)

430HX/HS: Heavy-weight materials (-05)

	1	2	3	4	5	6	7	8	9
Sewing speed for the 1st stitch	200	200	300	400	400	400	800	1,500	1,500
Sewing speed for the 2nd stitch	200	300	400	400	600	800	1,200	2,000	3,000
Sewing speed for the 3rd stitch	300	400	500	600	800	1,200	2,500	2,500	3,300
Sewing speed for the 4th stitch	500	600	700	900	1,200	2,500	3,300	3,300	3,300

(sti/min)

438HX/HS

	1	2	3	4	5	6	7	8	9
Sewing speed for the 1st stitch	200	200	300	300	300	400	400	400	400
Sewing speed for the 2nd stitch	200	200	300	300	400	400	400	600	900
Sewing speed for the 3rd stitch	300	300	300	400	400	400	600	900	1,500
Sewing speed for the 4th stitch	300	400	400	400	400	400	900	2,000	2,000

(sti/min)

* The speed will not be faster than the sewing speed which has been set.
* The thread nipper device will not operate for settings other than 8 and 9.

5-9. Copying programs (Additional program)

If you would like to reuse an existing program which has almost exactly the same parameters, but change only the necessary parts, you can copy the existing program and register the copy as a new additional program.

1	**Switch to the copy program screen.** 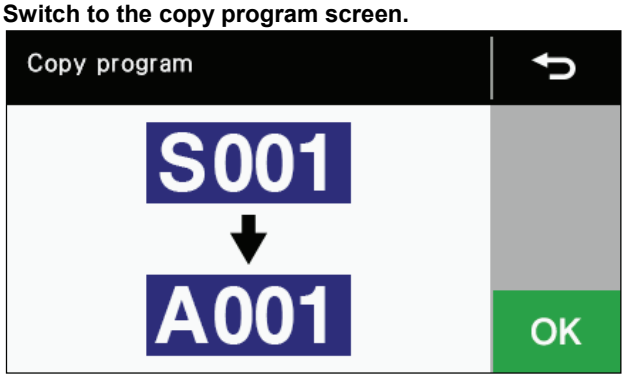 	Touch the menu key to switch to the setting menu screen. Touch "Copy program" in the menu to switch to the copy program screen. 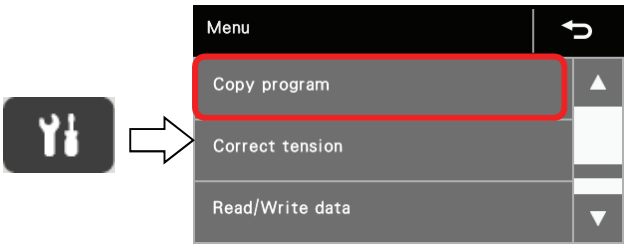
2	**Select the copy destination program.** 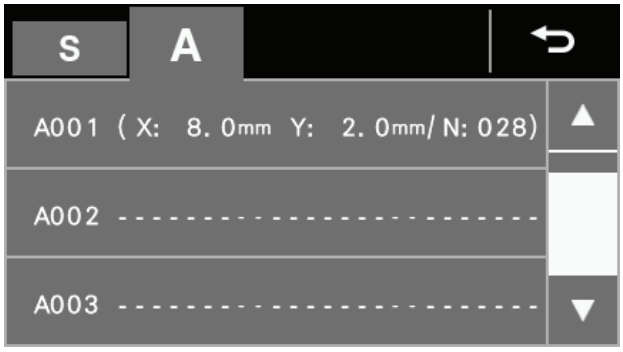 	When you touch the program number at the bottom of the copy program screen, the screen switches to the list for selecting the copy destination program number. Select from the list to change the copy destination program number. ・Select from additional program numbers A001 to A500. ・When a program number is selected, the display will switch immediately to the copy program screen. ・The destination program number for copying will blink.
3	**Select the copy source program.** 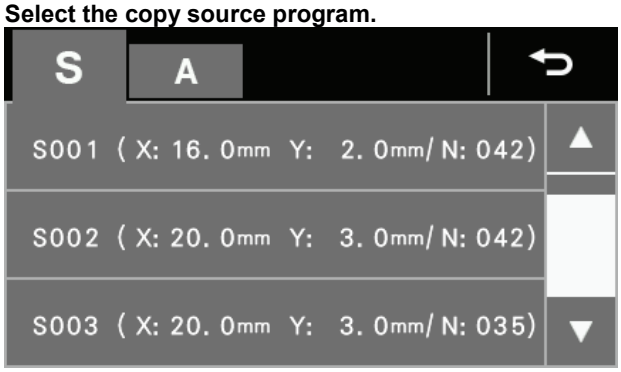 	Select from the list to change the number of the standard program or additional program to be copied. ・When a program number is selected, the display will switch immediately to the copy program screen.
4	**Copy the program.** 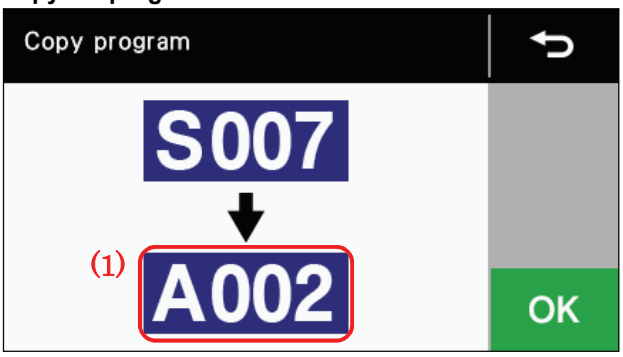 	Touch the OK key. ・All items in the program will be copied, and the copy destination program number (1) will stop blinking.
5	**Change the necessary items.**	Carry out the steps in "5-4. X scale and Y scale setting method", "5-5. Sewing speed setting method" and "5-6. Work clamp height setting method" and change the necessary items.

5-10. Checking the sewing pattern (KE-430HX/HS)

Use test feed mode to check the needle movement with only the work clamp operating.
Check that the needle hole does not come out from the frame of the work clamp.

1

1. Press the test key.
・The home screen will switch to the test mode screen.

↓Program No. flashes →illuminates

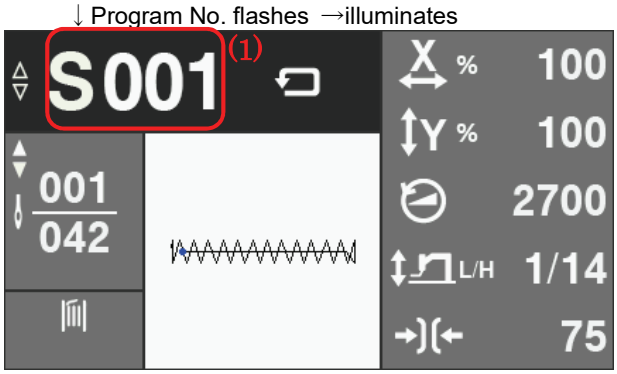

2. Press the change program No. key △ or ▽ to select the program number of the program to check, or touch the sewing program number to switch to the select program screen, and select the program.

If the program No. is flashing, depress the foot switch to the 2nd step.
・Home position detection will be carried out and the program number (1) will stop blinking and remain illuminated.

2nd step

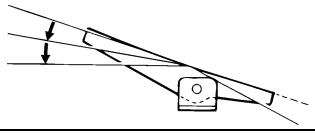

4441Q

2 **Start continuous test feed mode.**

1st step
2nd step

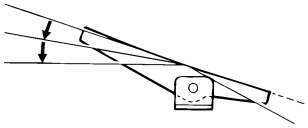

4441Q

Depress the foot switch to the 2nd step and then release it.
・The work clamp will start moving continuously one stitch at a time.
(The stitch count display will be incremented by one stitch at a time.)

[Fast-forward test mode]
If you depress the foot switch to the 1st step while the work clamp is moving, the feeding speed will become faster while the foot switch is being depressed.

[Test interrupt mode]

2nd step

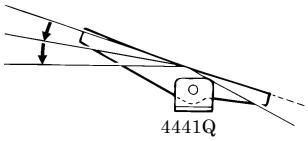

4441Q

If you would like the work clamp to stop moving, press the test key.
・When the foot switch is depressed to the 2nd step, the work clamp will start moving again.

[Paused sewing standby mode]

2nd step

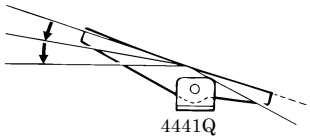

4441Q

If you would like sewing to resume from the point where it was paused, press the test key while test feeding is paused to switch to the home screen.
・When you depress the foot switch to the 2nd step, sewing will start again.

(2)
(3)

・If you press the change stitch count key ▲ (2) while in this mode, the work clamp will move forward by one stitch, and if you press the change stitch count key ▼ (3), the work clamp will move backward by one stitch. (It will continue to move if you keep the key pressed down.)

・If you press the pause key on the operation panel during paused sewing standby mode, the work clamp will return to the sewing start position.

3 **Once the test feed reaches the final stitch, the work clamp stops moving.**

If you press the test key while the work clamp is stopped, the test mode screen will switch to the home screen.

4

1st step

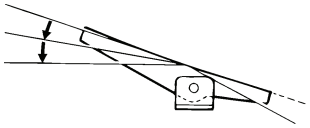

4441Q

Depress the foot switch to the 1st step.
The work clamp will rise and the preparation for sewing will be completed.

5-11. Checking the sewing pattern (BE-438HX/HS)

Use test feed mode to check the needle movement with only the button clamp operating.

1

1. Press the test key.
・The home screen will switch to the test mode screen.

↓Program No. flashes → illuminates

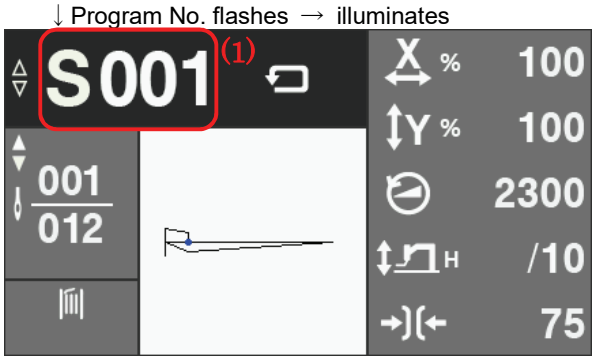

2. Press the △ or ▽ key to select the program number of the program to check, or touch the sewing program number to switch to the select program screen, and select the program.

If the program No. is flashing, depress the foot switch to the 2nd step.
・Home position detection will be carried out and program No. (1) will stop blinking and remain lit.

2st step

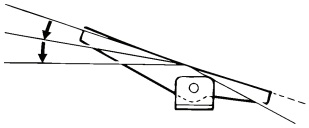

4441Q

2 **Set a button. (Refer to "4-8. Inserting a button".)**

3 **Start single-stitch test feed mode.**

1st step
2nd step

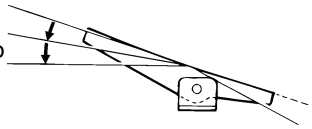

4441Q

Depress the foot switch to the 2nd step and then release it.
・The button clamp will move by one stitch only.

After this, the button clamp will move forward by one stitch each time you depress the foot switch to the 1st step. Turn the pulley by hand each time the button clamp moves by one stitch, and check whether the needle drops into the hole of the button without touching the button. (If you turn the machine pulley one full rotation in the direction of sewing machine operation at this time, the button clamp will move forward by one stitch when the needle bar is near the needle up position.)
In addition, when the foot switch is depressed to the 2nd step, the button clamp will move continuously by 1 stitch at a time as long as the foot switch is kept depressed.

[Paused sewing standby mode]

2nd step

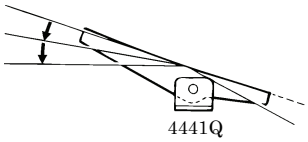

4441Q

If you would like sewing to resume from the point where it was paused, press the test key while test feeding is paused to switch to the home screen.

・When you depress the foot switch to the 2nd step, sewing will start.

・If you press the change stitch count key ▲ (2) while in this mode, the button clamp will move forward by one stitch, and if you press the change stitch count key ▼ (3), the button clamp will move backward by one stitch. (It will move quicker if you keep the key pressed down.)

・If you would like to start single-stitch test feed once more, press the test key to switch to the test mode.
・If you press the pause key on the operation panel, the button clamp will return to the sewing start position.

4 **Once the test feed reaches the final stitch, the button clamp stops moving.**

If you press the test key while the work clamp stops moving, the test mode screen will switch to the home screen.

5

1st step

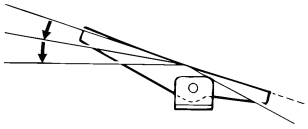

4441Q

Depress the foot switch to the 1st step.
The button clamp will rise and the preparation for sewing will be completed.

5-12. Correcting the upper thread tension (For KE-430HX and BE-438HX)

The upper tension value is always displayed on the home screen during sewing standby mode, and it can be changed at any time.

<A. Basic method of use>

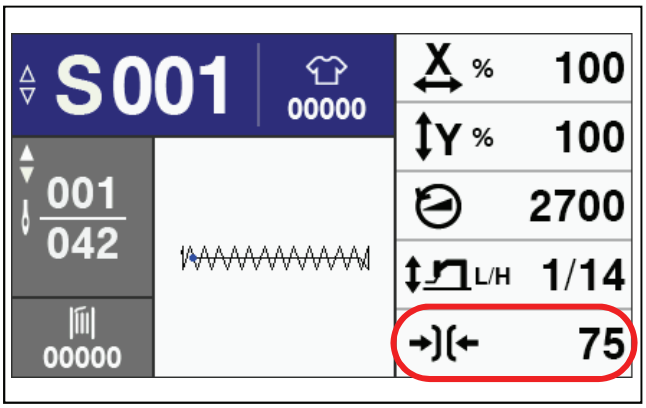

1. Touch the tension value on the home screen to switch to the tension setting screen.

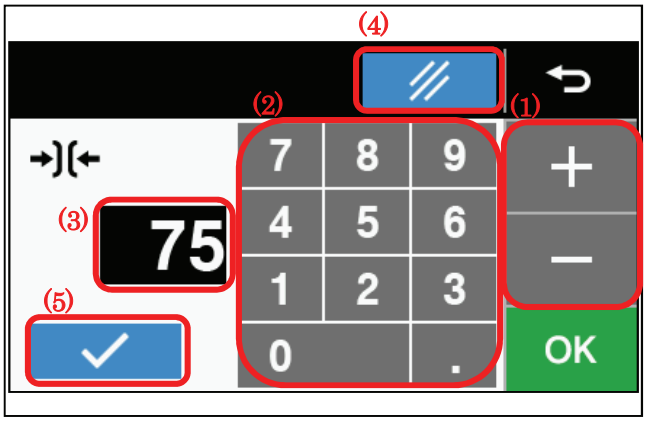

2. Touch the + or − key (1), or touch the numeric keypad keys (2) to change the tension value (3).

Touch the reset key (4) to set the initial value ("75").

Once the value has been set, touch the OK key.

- Touch the OK key to switch to the home screen, and the upper thread tension value which is set will be applied from the next time sewing is carried out.
- If you touch the check key (5), the digital tension will operate at the tension value which is currently set on the panel.

<B. Overall correction>

This function is useful if you would like to change the tension values for all programs at once.

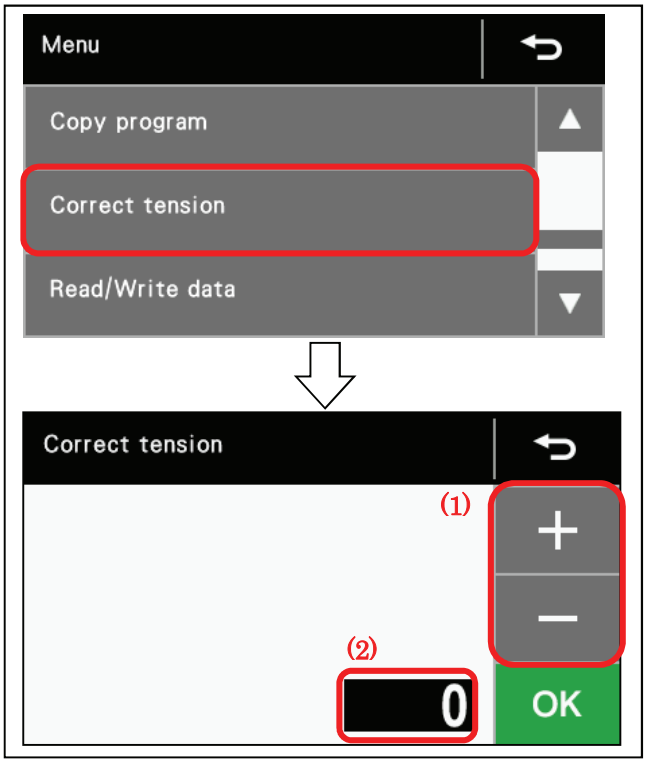

1. Press the menu key to switch to the setting menu screen.
   Touch "Correct tension" in the setting menu screen to switch to the correct tension screen.
2. Touch the + or − key (1) to change the overall correction value (2).
3. Touch the OK key.
   - The upper thread tension value which is set will be applied from the next time sewing is carried out.

5-13. Illumination LED setting method

1	**Switch to the illumination LED setting screen.** 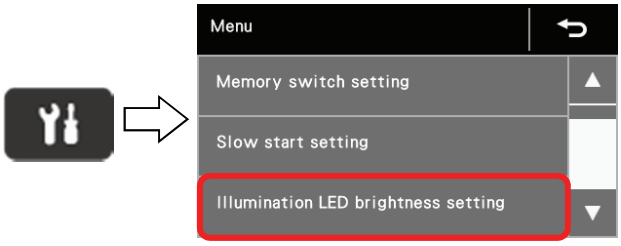 	Touch the menu key to switch to the setting menu screen. Touch "Illumination LED brightness setting" in the menu to switch to the illumination LED brightness setting screen.
2	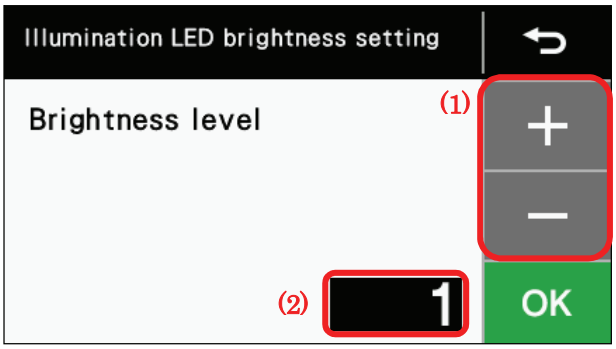 	You can touch the + or − key (1) to change the illumination LED brightness (2). When the setting is complete, touch the OK key OK on the screen. ・When you touch the OK key to switch to the setting menu screen, the LED will illuminate at the set brightness. ・If you would like to cancel the setting, press the return key, the menu key or the home key to switch the screen without applying the changes. ・The brightness level can be set to a value from "0" to "9". ・If the brightness level is set to "0", the LED will switch off, and if it is set to a number from 1 to 9, the LED brightness will be greater if a larger number is selected as the setting.

6. USING THE OPERATION PANEL (ADVANCED OPERATIONS)

⚠ CAUTION

To prevent problems, do not use objects with sharp points to operate the operation panel.

6-1. Setting memory switches

1 **Switch to the memory switch setting screen.**

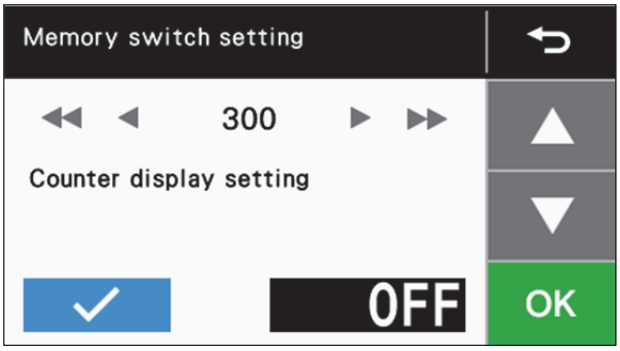

Touch the menu key to switch to the setting menu screen. Touch "Memory switch setting" in the menu.

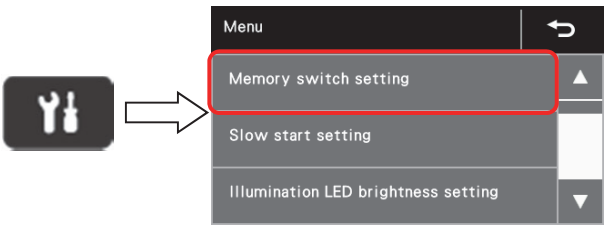

- The display will switch to the memory switch setting screen.

2 **Select the memory switch that you would like to change the setting for.**

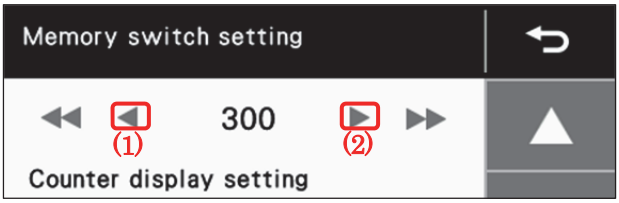

Touch the ◀ key (1) or the ▶ key (2) to select a memory switch number.

If you would like to display only the numbers of memory switches that have been changed from default settings.

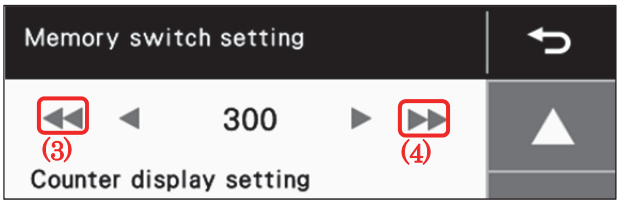

Touch the ◀◀ key (3) or the ▶▶ key (4).

- The numbers of memory switches that have been changed from default settings will appear in order.

3 **Change the memory switch parameters.**

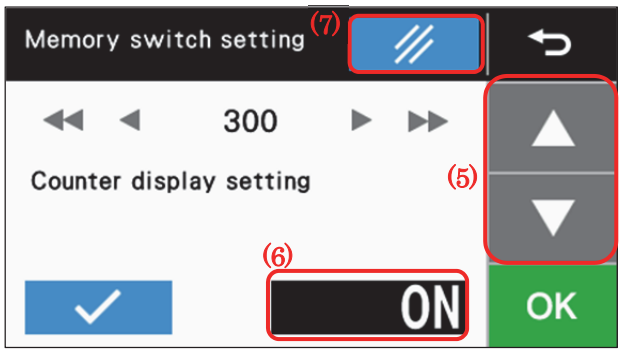

Touch the ▲ key or the ▼ key (5) to change the setting value (6).

- If the setting value has not been confirmed, the display will blink.
- You can make the initial setting appear in the display by touching the reset key (7).

When checking detailed explanations of memory switches

You can touch the check key (8) to check the detailed explanation of the memory switch which is currently selected.

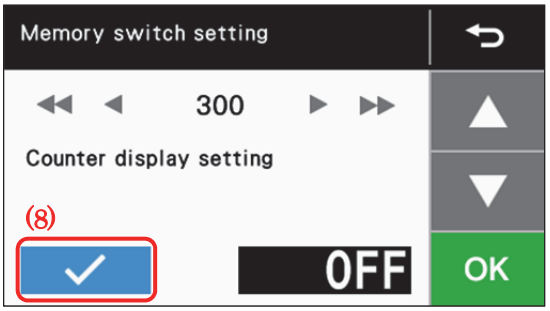

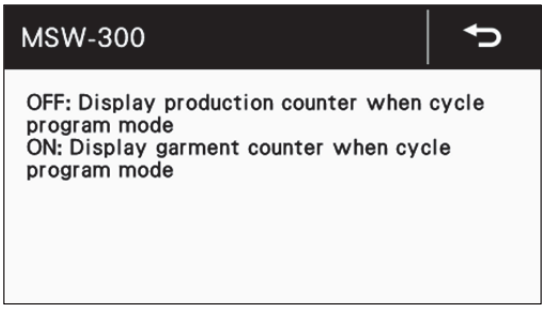

4 **Apply the changed parameter setting.**

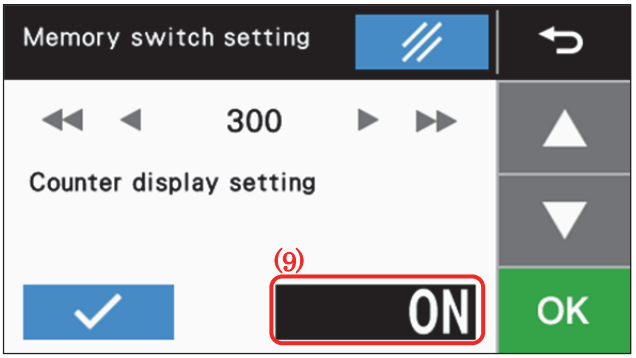

Touch the OK key OK.

- The setting value (9) will stop blinking and illuminate, and this means that the parameter setting is confirmed.
- If you change the memory switch number or touch the menu key or the return key to switch the screen without touching the OK key, you can cancel the changes.

5 **Repeat steps 2 to 4 above to set each memory switch.**

6 **Exit setting mode.**

Touch the back key or the menu key.

- The display will return to the setting menu screen.

6-2. List of memory switches

No.	Function name		
	Setting value	Setting details	Initial value
001	Work clamp / button clamp lift timing after sewing is completed		
	OFF	Does not lift automatically	1
	1	Lifts at the final stitch position.	
	2	Lifts after moving to the home position.	
100	Sewing speed at the sewing start		
	OFF	The sewing speed for the first 1 to 5 stitches is set by memory switch Nos. 151 to 155. (Refer to the Service Manual for details of memory switch Nos. 151 to 155.)	ON
	ON	Slow start patterns can be selected from the slow start settings in the setting menu screen.	
200	Single-stitch test feed		
	OFF	When the foot switch is depressed to the 2nd step (start switch), test feed moves automatically to the final stitch, and when the foot switch is depressed to the 1st step (work clamp switch), quick feeding is carried out.	430H:OFF
	ON	The test feed moves 1 stitch at a time when the foot switch is depressed to the 1st step (work clamp switch). In addition, test feed advances one stitch at a time when the machine pulley is turned by hand.	438H:ON
300	Production counter display		
	OFF	The production counter is displayed when using cycle programs.	OFF
	ON	The garment counter is displayed when using cycle programs.	
402	X scale/Y scale unit (mm/%) (* The mm display may differ slightly from the actual sewing size.)		
	OFF	Displayed as %.	OFF
	ON	Displayed as mm.	
406	Switching program numbers by F keys		
	OFF	The program number switching function is disabled.	OFF
	ON	When the F1 to F4 keys are pressed, operation switches to the program number which has been pre-assigned to the respective key. Assignment to F1 key: memory switch No. 407 Assignment to F2 key: memory switch No. 408 Assignment to F3 key: memory switch No. 409 Assignment to F4 key: memory switch No. 410	

No.	Function name			
	Setting value	Setting details		Initial value
407	Assignment to F1 key			
	OFF 1 to 100 : S001 to S089 1001 to 1500 : A001 to A500 2001 to 2100 : U001 to U100 3001 to 3030 : C001 to C030	If memory switch No. 406 is set to "ON", operation switches to the program number which has been set.		OFF
408	Assignment to F2 key			
	OFF 1 to 100 : S001 to S089 1001 to 1500 : A001 to A500 2001 to 2100 : U001 to U100 3001 to 3030 : C001 to C030	If memory switch No. 406 is set to "ON", operation switches to the program number which has been set.		OFF
409	Assignment to F3 key			
	OFF 1 to 100 : S001 to S089 1001 to 1500 : A001 to A500 2001 to 2100 : U001 to U100 3001 to 3030 : C001 to C030	If memory switch No. 406 is set to "ON", operation switches to the program number which has been set.		OFF
410	Assignment to F4 key			
	OFF 1 to 100 : S001 to S089 1001 to 1500 : A001 to A500 2001 to 2100 : U001 to U100 3001 to 3030 : C001 to C030	If memory switch No. 406 is set to "ON", operation switches to the program number which has been set.		OFF
411	Assignment to F5 key			
	OFF	No assignment		OFF
	1	Moves to the home position		
500	Thread nipper device			
	OFF	Disable		OFF
	ON	Thread nipper device can be used. (*1)		

*1 The setting is enabled when memory switch No. 100 is set to "ON", the slow start pattern is set to 8 or 9 and when the sewing speed value is set to 1,500 sti/min or more.

6-3. Using the lower thread counter

If you use the lower thread counter to set the number of articles which can be sewn with the amount of lower thread available, you can stop the lower thread running out in the middle of sewing a pattern.

<Initial value setting>

1 Switch to lower thread counter setting mode.

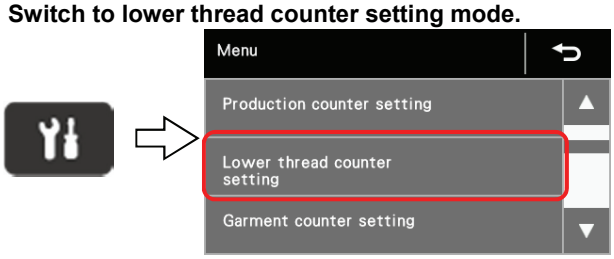

From the setting menu screen
Press the menu key to switch to the setting menu screen, and then touch "Lower thread counter setting" in the menu.

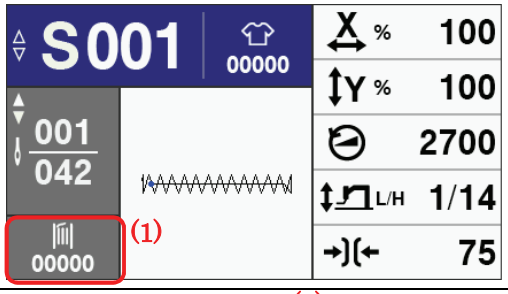

From the home screen
At the home screen, you can also touch the lower thread counter icon 00000 (1) to switch the screen.

- The 5 digits of the current counter value will be displayed.

2 Change the initial value.

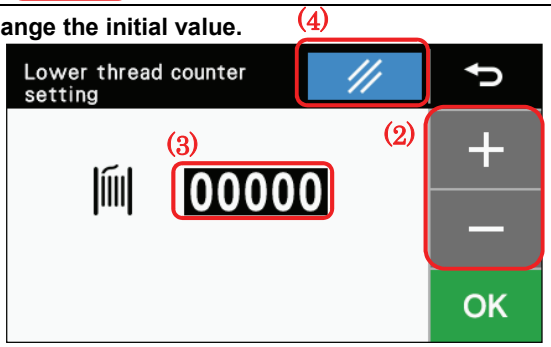

Touch the + key or the − key (2) to change the counter value (3).

- The initial value can be set from 1 "00001" to 9999 "09999".
- If the initial value is set to "00000", the lower thread counter will not operate.
- If you touch the reset key (4), the setting will become "00000".

3 Apply the changed parameter setting.

Touch the OK key.

- The value will be applied and the display will return to the setting menu screen (*1).
- If you touch the back key without touching the OK key, you can cancel the parameter changes.

*1 If you have switched from the home screen, the display will return to the home screen.

<Lower thread counter operation>

If the initial value is set to other than "0", the lower thread counter will operate.

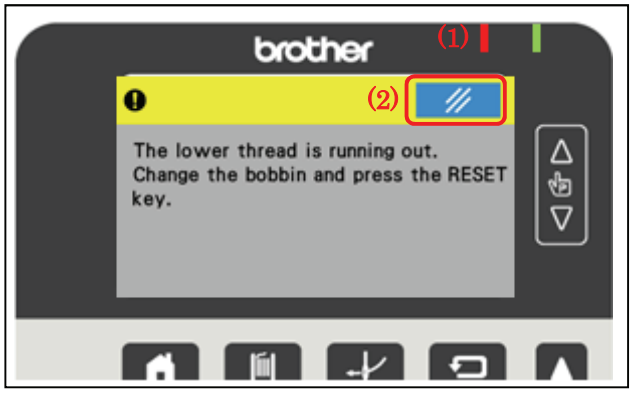

1. Each time the sewing of a single article is completed, the value displayed on the home screen decreases by 1.
2. When the lower thread counter becomes "00000", the lower thread counter warning screen will be displayed, the caution LED (1) will blink, and the buzzer will sound. The sewing machine will not operate during this time, even if the foot switch is depressed.
3. If you touch the reset key (2), the display will switch to the home screen, the lower thread counter value will return to the setting value, and sewing will be possible.

6-4. Using the production counter

<Setting the counter value>

1 **Switch to production counter setting mode.**

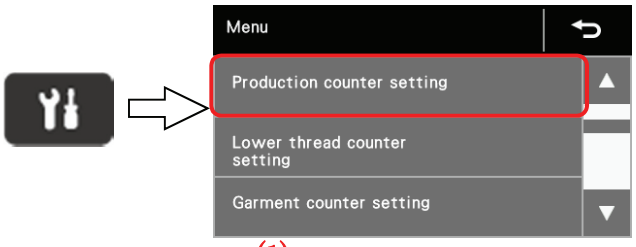

From the setting menu screen
Press the menu key to switch to the setting menu screen, and then touch "Production counter setting" in the menu.

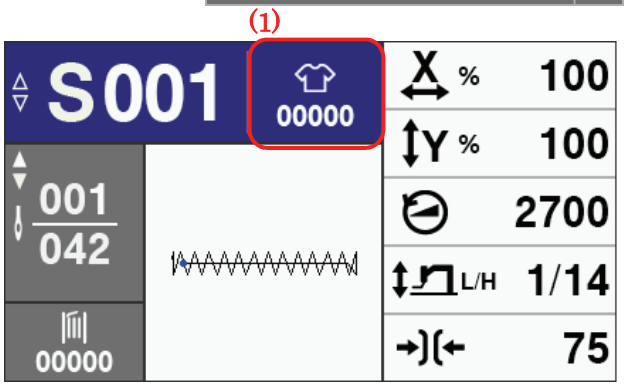

From the home screen

At the home screen, you can also touch the production counter icon (1) to switch the screen.

・The 7 digits of current counter value will be displayed.

2 **Change the counter value.**

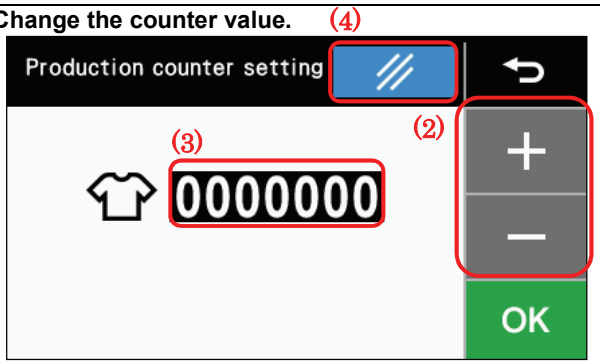

Touch the + key or the − key (2) to change the counter value (3).

・The counter value can be set from "0000000" to "9999999".
・If you press the reset key (4) during setting mode, the value will become "0000000".

3 **Apply the changed parameter setting.**

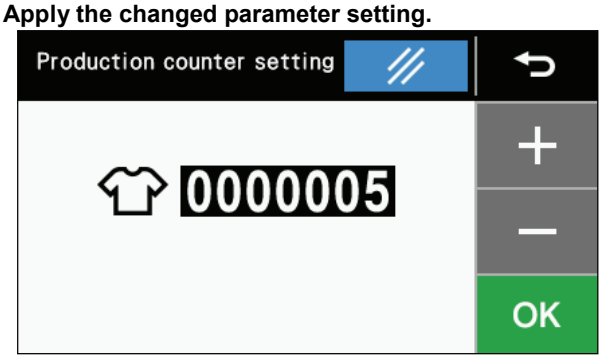

Touch the OK OK key.

・The value will be applied and the display will return to the menu (*1).
・If you touch the back key without touching the OK key, you can cancel the parameter changes.

*1 If you have switched from the home screen, the display will return to the home screen.

<Production counter operation>

The production counter is always operating.

・The counter value displayed in the home screen is incremented by 1 each time one sewing operation is completed.
* The lower 5 digits are displayed in the home screen. If you would like all digits to be displayed, check using the production counter setting screen.

6-5. Using the garment counter

<Setting the counter value>

1 **Switch to garment counter setting mode.**

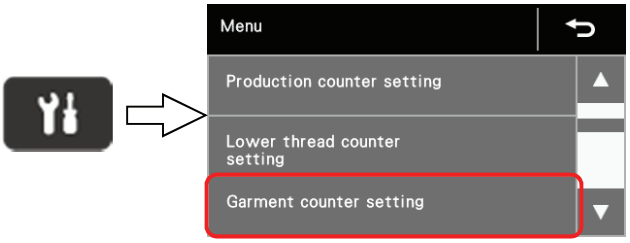

From the setting menu screen
Touch the menu key to switch to the setting menu screen, and touch "Garment counter setting" in the menu.

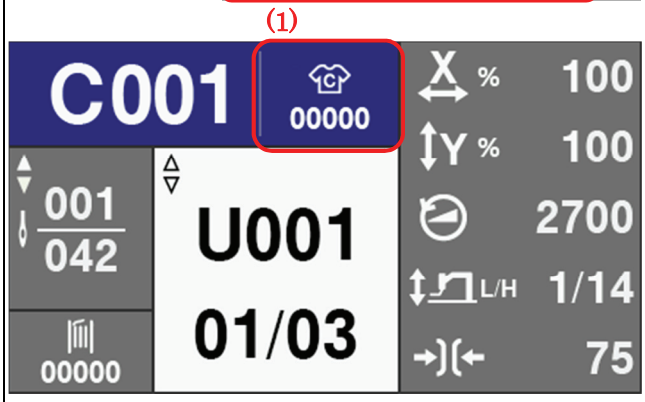

From the home screen
When a cycle program is selected or if memory switch No. 300 is set to "ON", you can also touch the garment counter icon 00000 (1) at the home screen to switch the screen.

- The 5 digits of current counter value will be displayed.

2 **Change the counter value.**

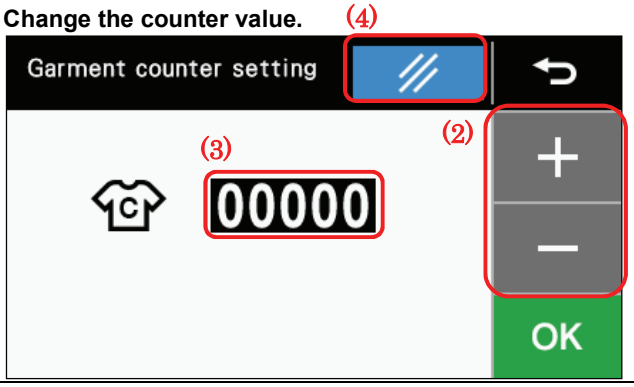

Touch the + key or the − key (2) to change the counter value (3).

- The counter value can be set from "00000" to "09999".
- If you press the reset key (4) during setting mode, the value will become "00000".

3 **Apply the changed parameter setting.**

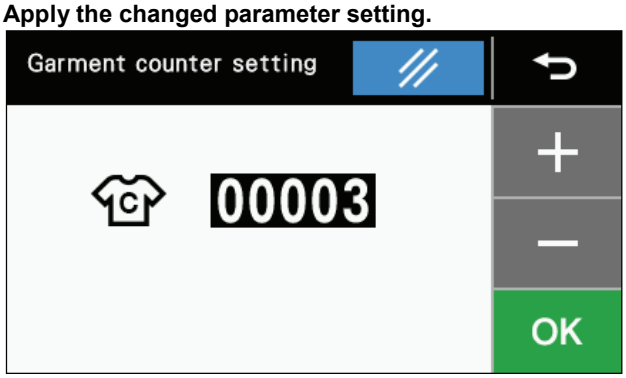

Touch the OK key OK.

- The value will be applied and the display will return to the menu (*1).
- If you touch the back key without touching the OK key, you can cancel the parameter changes.

*1 If you have switched from the home screen, the display will return to the home screen.

<Garment counter operation>

The garment counter always operates when sewing cycle programs.

- If you would like to display the garment counter on the home screen, set memory switch No. 300 to "ON".
- The garment counter will not be displayed on the home screen when sewing programs other than cycle programs.
- The counter value which is displayed on the home screen will be incremented by 1 each time all of the steps in the selected cycle program have been sewn once.

6-6. Using cycle programs

Sewing patterns that have been registered in user programs can be registered in up to 30 cycle programs (C001 to C030).
One cycle program can contain user programs up to a maximum of 50 steps.
When sewing the sewing patterns in a certain order, it can be useful to register them in a cycle program beforehand.

<Recording method>

1	**Switch to the cycle program setting screen.** 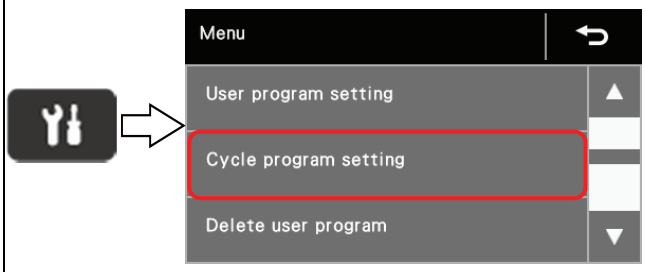 	Touch the menu key to switch to the setting menu screen, and touch "Cycle program setting" in the menu. ・The display will switch to the select cycle program screen.
2	**Select a cycle program number.** 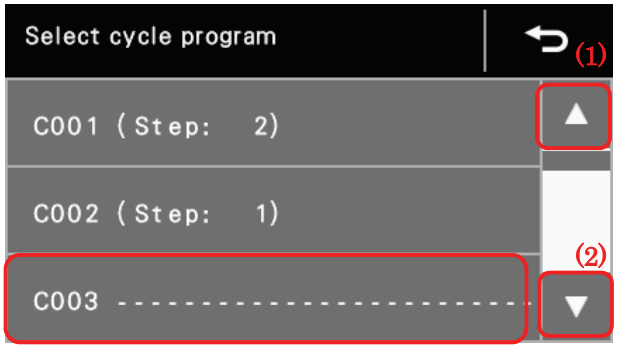 	Touch the ▲ key (1) or the ▼ key (2) to select the cycle program number. ・If no cycle program has been registered, "---" will be displayed after the program number. Select the program number for the program you would like to edit, and touch the list. ・The cycle program edit screen will be displayed.
3	**Select the program number to be registered in step 1.** 	Select the step No.01 on the top of the list. ・A check mark will appear in the check column of the list which was touched. ・If you would like to delete the registration, you can do it by touching a step to select it, and then touching the clear key (3).

4 **Switch to the select program screen.**

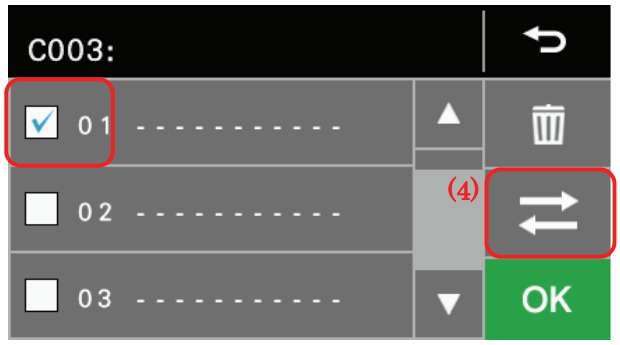

Once a step has been selected and a check mark appears, touch the step select key (4).

- The display will switch to the select user program screen.
- The user programs which have been registered will be set in the selected step.

5 **Select a program.**

Touch the user program which has been registered as a step to select it from the list.

- The display will switch to the cycle program edit screen and the selected program will be registered in the selected step.

6 **Repeat steps 3 to 5 above to register step 2 and subsequent steps in the same way.**

- **If you would like to insert a new step in between two existing steps**

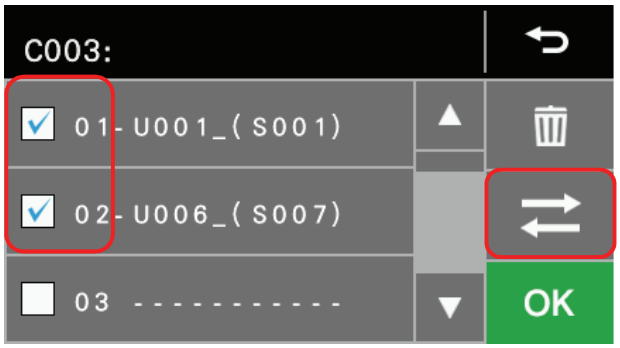

If two or more steps are registered and you would like to insert a new step in between two already-registered steps, add check marks to the two existing steps to select them, and then touch the step select key .

- The selected user program will be registered in between the two selected steps at this time.

7 **End cycle program setting mode.**

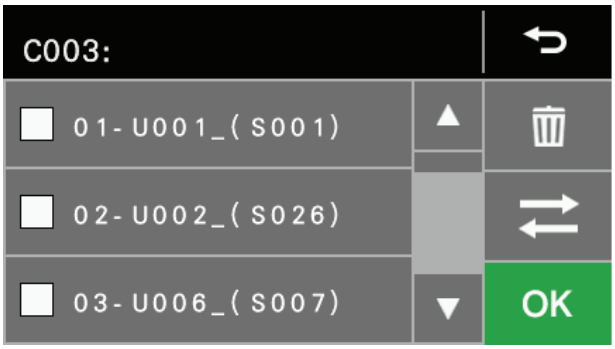

Touch the OK OK key.

- The display will return to the select cycle program screen.

This completes the registering of cycle programs.

8 **If you would like to continue setting another cycle program, repeat steps 2 to 7 above.**

6-7. Direct selection

You can use the function keys to directly select program numbers or cycle program numbers. **However, if a program number has nothing registered, it can not be selected.**

<Function keys>

Functions can be switched by changing the memory switch settings.

406=OFF (Initial setting)

None of the function keys operate when pressed.			
F1	F2	F3	F4

406=ON

Item specified by memory switch No.407 F1	Item specified by memory switch No.408 F2	Item specified by memory switch No.409 F3	Item specified by memory switch No.410 F4

6-8. Reading and writing data using USB memory

⚠ CAUTION

Do not connect anything to the USB port other than the USB memory. If this is not observed, problems with operation may result.

Programs and memory switch setting details can be copied between sewing machines by means of USB memory.

1 **Switch to Read/Write data mode.**

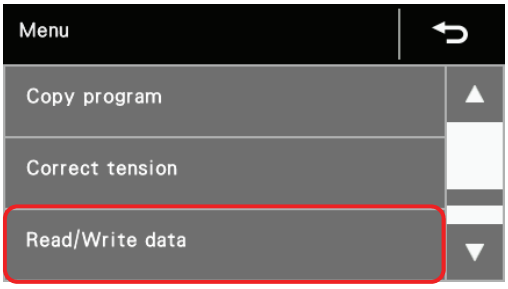

1. First connect the USB memory to the sewing machine.
2. At the home screen, press the menu key to display the scrolling setting menu screen, and then select the "Read/Write data" menu item. The mode will then change to USB memory read/write mode.
   * Some multi card readers may not be recognized.
   * If there is no USB memory connected at this time, the message "USB memory is not connected or inserted." will be displayed.

2 **Read or write data between the sewing machine and the USB memory.**

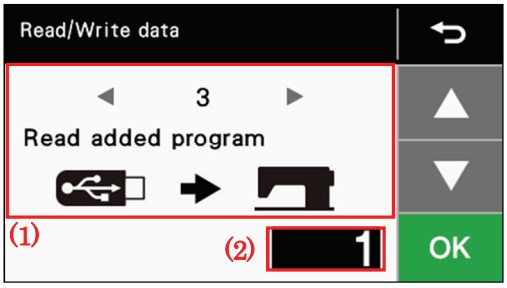

1. The currently-selected read/write item and illustration (1) are displayed, so press the ◀ or ▶ key to change the read/write item.
2. Press the OK OK key to run the selected read/write item. The read/write in progress screen will be displayed.
   * To read additional programs from or write them to read/write items "3" and "4", use the ▲ or ▼ keys to select the program number (2) to read from or write to.

・Touch the return key (4) to return to the setting menu screen.

The read/write items that can be selected are as follows.

Code	Setting item	Read/write direction
1	Read all data	USB memory ➡ Sewing machine
2	Write all data	Sewing machine ➡ USB memory
3	Read added program	USB memory ➡ Sewing machine
4	Write added program	Sewing machine ➡ USB memory
5	Read program	USB memory ➡ Sewing machine
6	Write program	Sewing machine ➡ USB memory
7	Read memory switch	USB memory ➡ Sewing machine
8	Write memory switch	Sewing machine ➡ USB memory

Structure of USB memory

Data type	File name	Folder name
Additional program	ISMS0***.SEW (*** represents a program No.) (The numbers that can be read are from 001 to 500.)	\BROTHER\ISM\ISMDA**\ (** represents the value of memory switch No.750.) (Refer to the Service Manual for details of memory switch No. 750.)
Sewing parameters of programs	ISMUPG.SEW	Same as above
Memory switch settings	ISMMSW.SEW	Same as above
Cycle program	ISMCYC.SEW	Same as above

6-9. Data initialization method

If the sewing machine stops operating normally, the cause may be that an incorrect setting may have been made for the memory data by means of memory switches, for instance. In such cases, it may be possible to restore normal operation by following the steps given below to initialize the memory setting data.

1 **Switch to initialization mode.**

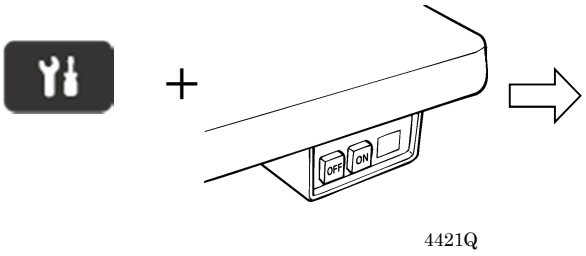

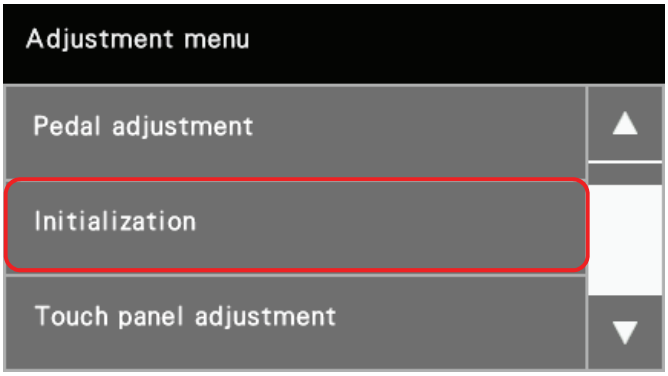

(While pressing the menu key, turn on the power switch.)

The adjustment menu screen will be displayed.
Touch "Initialization" in the menu to switch to the initialization screen.

[Reference]

If the ▲ or ▼ key is touched at this time, you can select the items to be initialized as shown below.

* For details on initialization items other than "All clear", refer to the Service Manual.

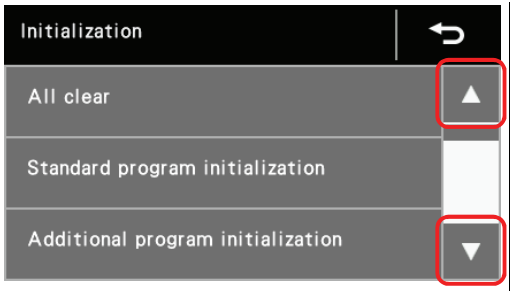

Items displayed on the screen	Initialization items
All clear	All data in memory is cleared or initialized.
Standard program initialization	The sewing condition settings are initialized.
Additional program initialization	All additional program settings are initialized.
User program initialization	All user program settings are initialized.
Cycle program initialization	All cycle program settings are initialized.
Memory switch initialization	All memory switches which can be initialized are initialized.

2

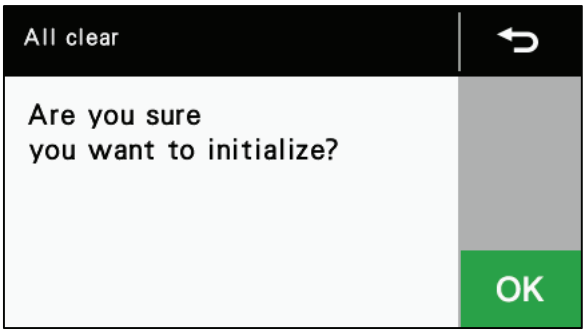

If you touch an item name in the list, the initialization check screen will be displayed.

- Touch the OK key OK to start the initialization.
- When the screen display returns to the initialization screen, initialization is complete.

7. SEWING

⚠ CAUTION

- Attach all safety devices before using the sewing machine.
  If the machine is used without these devices attached, injury may result.
- Turn off the power switch at the following times. The machine may operate if the foot switch is depressed by mistake, which could result in injury.
  - When replacing the bobbin and needle
  - When not using the machine and when leaving the machine unattended
- Use threading mode or turn off the power first in order to carry out threading.
- Do not touch any of the moving parts or press any objects against the machine while sewing, as this may result in personal injury or damage to the machine.
- Secure the table so that it will not move when tilting back the machine head. If the table moves, it may crush your feet or cause other injuries.
- Use both hands to hold the machine head when tilting it back or returning it to its original position.
  If only one hand is used, the weight of the machine head may cause your hand to slip, and your hand may get caught.

7-1. Sewing

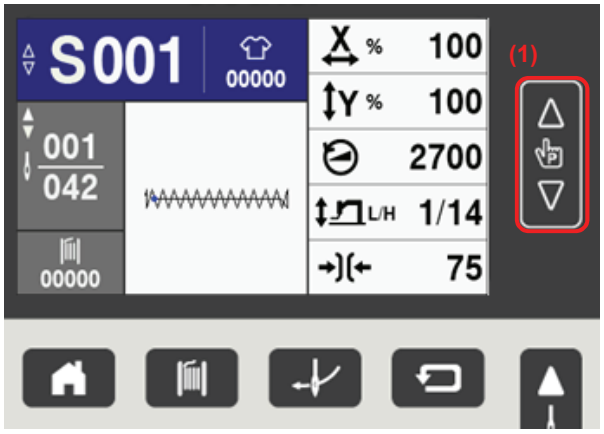

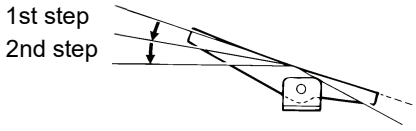

4441Q

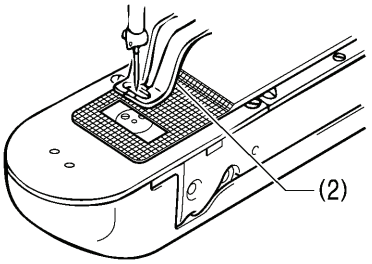

3888B

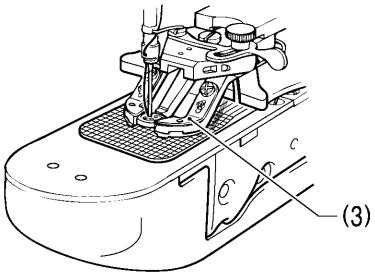

3889B

1. Turn on the power switch.
2. Press the change program No. key △ or ▽ (1) to select the number for the program to be sewn.
3. Depress the foot switch to the 2nd step.
   The home position detection 1st will be carried out.
4. Set the material under the work clamp (2).
   (For the BE-438HX/HS insert a button and place the material under the button clamp (3). (Refer to “4-8. Inserting a button”.)
5. Depress the foot switch to the 1st step.
   The work clamp (2) / button clamp (3) will be lowered.
6. Depress the foot switch to the 2nd step.
   The sewing machine will start sewing.
7. Once sewing is completed and the thread has been trimmed, the work clamp (2) / button clamp (3) will rise.

7-2. Changing sewing conditions

"X-scale", "Y-scale" and "Sewing speed" can be changed even during sewing standby.
The changes made at this time will be reflected in the program, so this is a useful way of changing programs while checking actual sewing.

<Changing X-scale and Y-scale>

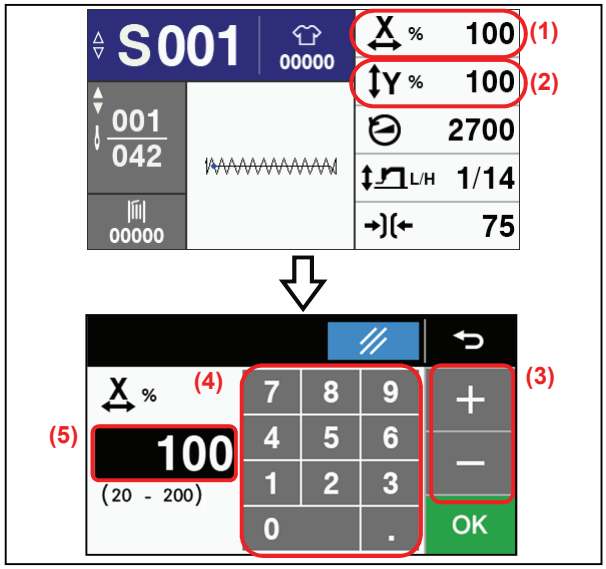

1. Touch the X scale value (1) or the Y scale value (2) on the home screen to switch to the X scale/Y scale setting screen.
2. Touch the + or − key (3), or touch the numeric keypad keys (4) to change the scale (5).
   - Touch the OK key OK to switch to the home screen, and the scale value which is set will be applied from the next time sewing is carried out.
3. Depress the foot switch to the 2nd step.
   - The work clamp / button clamp will move to the sewing start position and the program number will stop blinking and remain lit.

NOTE:
Once the setting is completed, be sure to carry out the steps in "5-10./5-11. Checking the sewing pattern" to check that the needle drop position is correct.

<Changing the sewing speed>

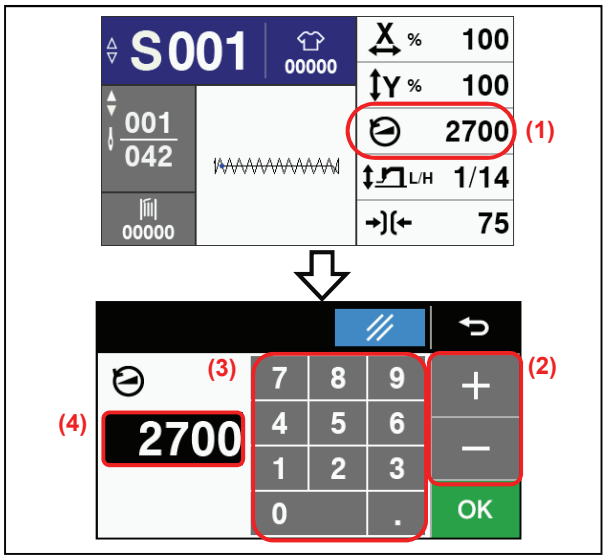

1. Touch the sewing speed value (1) on the home screen to switch to the sewing speed setting screen.
2. Touch the + or − key (2), or touch the numeric keypad keys (3) to change the sewing speed (4).
   (Sewing speed values: 200 to 3,300 for the KE-430HX/HS and 200 to 2,800 for the BE-438HX/HS)
   - Touch the OK key OK to switch to the home screen, and the sewing speed value which is set will be applied from the next time sewing is carried out.

<Changing slow start pattern>

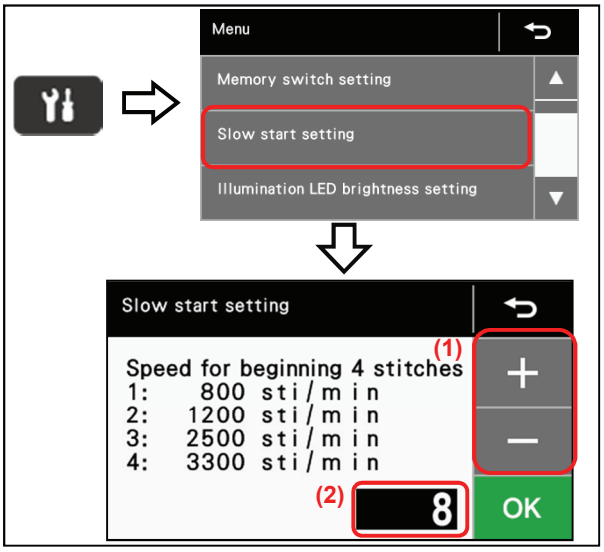

* This setting cannot be made when the memory switch No. 100 is set to "OFF".

1. Touch the menu key to switch to the setting menu screen. Touch "Slow start setting" in the menu to switch to the slow start setting screen.
2. You can touch the + or − key (1) to change the slow start pattern (2).
   (Initial value is 8 for the 430HX/HS and 7 for the 438HX/HS.)
   - Touch the OK key OK to switch to the setting menu screen, and the slow start setting value which is set will be applied from the next time sewing is carried out.

* Refer to "5-8. Slow start pattern setting method".

8. MAINTENANCE

⚠ CAUTION

Turn off the power switch before carrying out cleaning. The machine may operate if the foot switch is depressed by mistake, which could result in injury.

Be sure to wear protective goggles and gloves when handling the lubricating oil and grease, so that they do not get into your eyes or onto your skin, otherwise inflammation can result.
Furthermore, do not drink the oil or eat the grease under any circumstances, as they can cause vomiting and diarrhea. Keep the oil out of the reach of children.

Secure the table so that it will not move when tilting back the machine head.
If the table moves, it may crush your feet or cause other injuries.

Use both hands to hold the machine head when tilting it back or returning it to its original position.
If only one hand is used, the weight of the machine head may cause your hand to slip, and your hand may get caught.

8-1. Cleaning the hook

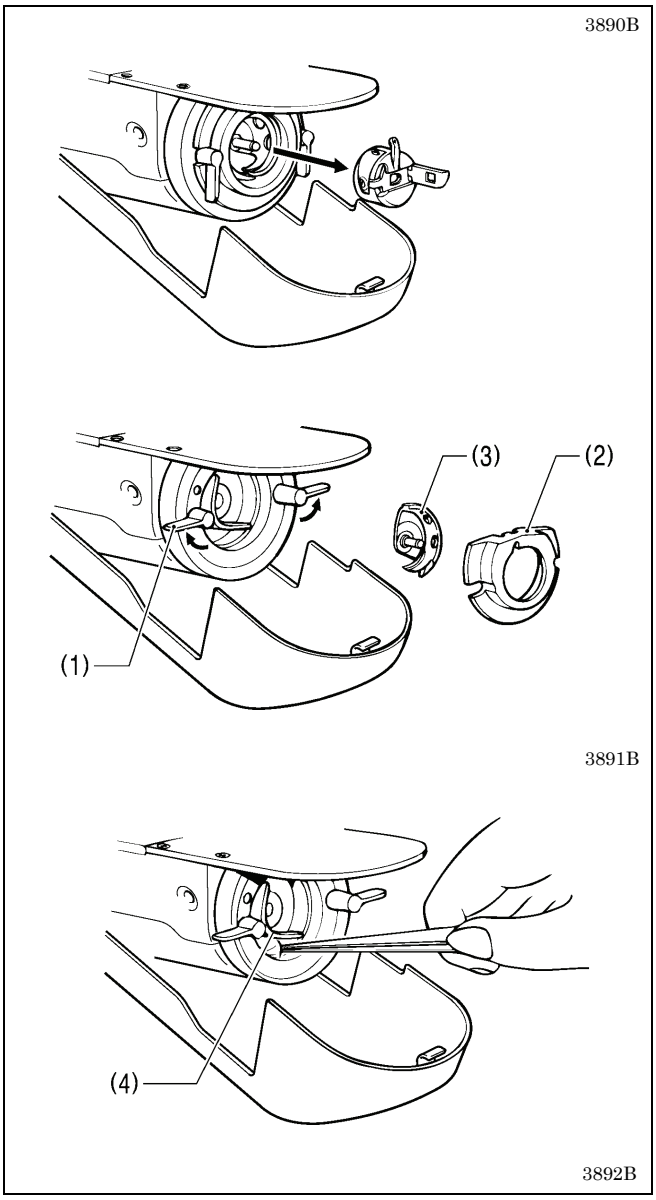

1. Pull the shuttle race cover downward to open it, and then remove the bobbin case.

2. Open the setting claw (1) in the direction indicated by the arrow, and then remove the shuttle race base (2) and the shuttle hook (3).

3. Clean all the dust and lint from around the driver (4), the top of the shuttle race thread guide and the shuttle race.

8-2. Draining the oil

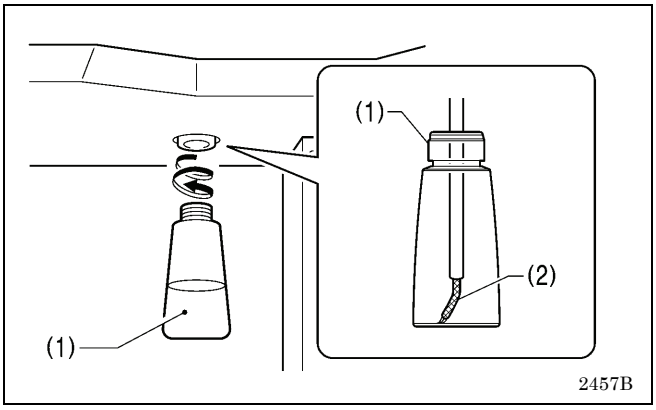

1. Remove and empty the oiler (1) whenever it is full.
2. After emptying the oiler (1), screw it back into its original position.

   * Check that the felt (2) is inside the oiler (1).

8-3. Cleaning the eye guard

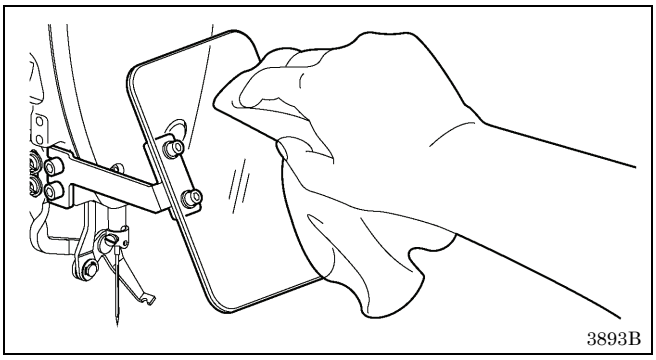

Wipe the eye guard clean with a soft cloth.

NOTE:
Do not use solvents such as kerosene or thinner to clean the eye guard.

8-4. Checking the needle

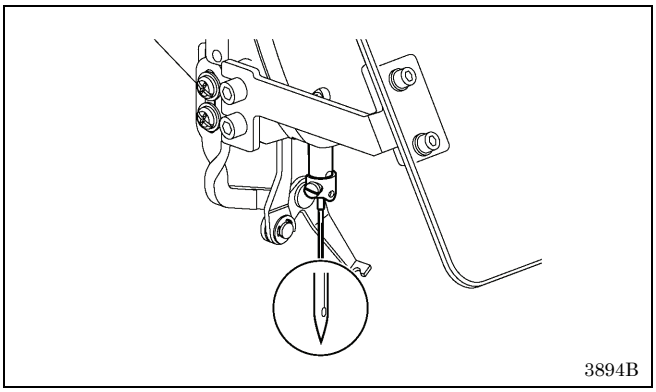

Always check that the tip of the needle is not broken and also the needle is not bent before starting sewing.

8-5. Lubrication

Carry out the lubrication referring to “3-13. Lubrication”.

8-6. Applying grease (Work clamp: KE-430HX/HS)

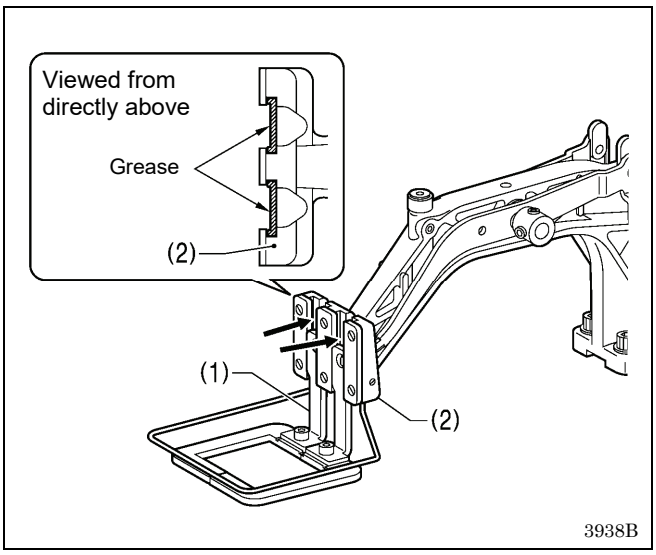

Periodically apply grease to the sliding parts of the work clamp (1) and the work clamp arm (2).

NOTE:

After replacing the work clamp (1), be sure to apply grease before using it.

* It is recommended that you use commercially-available JXTG Nippon Oil & Energy POWERNOC WB 2 grease for the work clamp (1).

8-7. Cleaning the needle cooling equipment (KE-430HX)

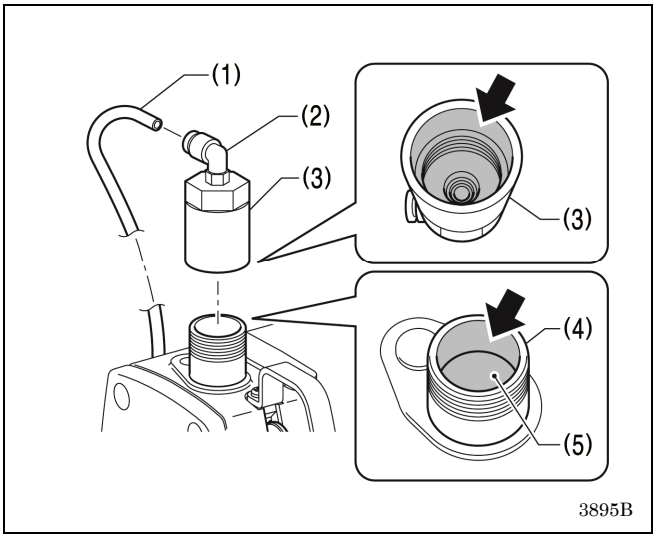

1. Disconnect the tube (1) from the elbow union (2), and then remove the air cylinder cover (3).
2. Turn the pulley to move the needle bar to its highest stop position.
3. Remove any dust and thread scraps from inside the air cylinder cover (3), inside the needle bar bush (4) and from the top of the needle bar (5).

NOTE:

Be careful not to damage any of the parts.

8-8. Changing lubricating oil (When the oil change warning is displayed)

If the oil change warning is displayed when the power switch is turned on, it is to notify you that it is time to change the oil.
(The sewing machine will not operate at this time, even if the foot switch is depressed.)
Change oil as required, while referring to the following for details.

< To continue sewing temporarily without changing oil >

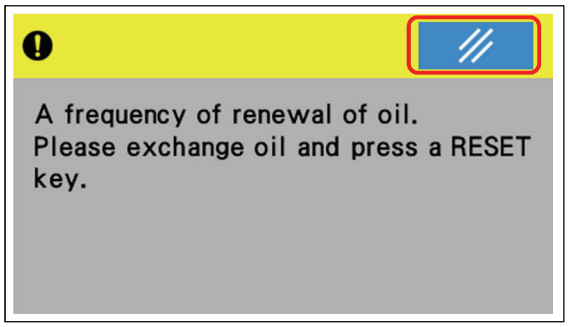

1. Press the reset key .
2. After you return to the home screen, you can depress the foot switch to resume sewing.

NOTE:
- The oil change warning will continue to be displayed each time the power is turned on until the oil is changed and the notification is reset by carrying out the procedure on page 80.
- If you continue to use the sewing machine after the oil change warning appears without changing the oil (or without carrying out the reset procedure), "E100" will appear after a certain period of time and the sewing machine will be forcibly prevented from operating for safety reasons.
  If this happens, change the oil and then carry out the reset procedure.

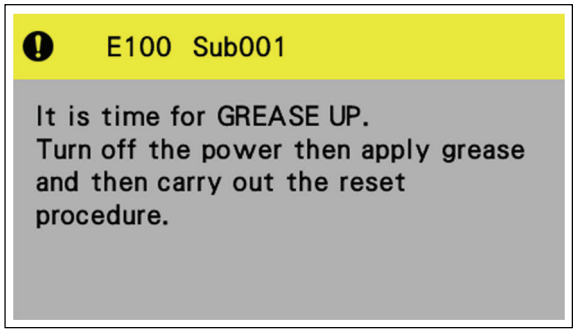

*** If you continue to use the sewing machine after carrying out the reset procedure but without changing the oil, problems with the sewing machine may result.**

・Use only the lubricating oil <JXTG Nippon Oil & Energy SEWINGLUBE N 10; VG10> specified by Brother.
* If this type of lubricating oil is difficult to obtain, the recommended oil to use is <Exxon Mobil Essotex SM10; VG10>.

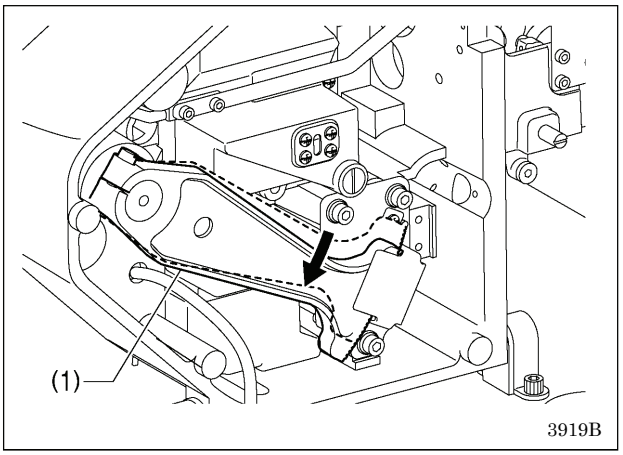

1. Turn off the power switch.
2. Tilt back the machine head.
3. Move the X-feed gear (1) in the direction of the arrow.

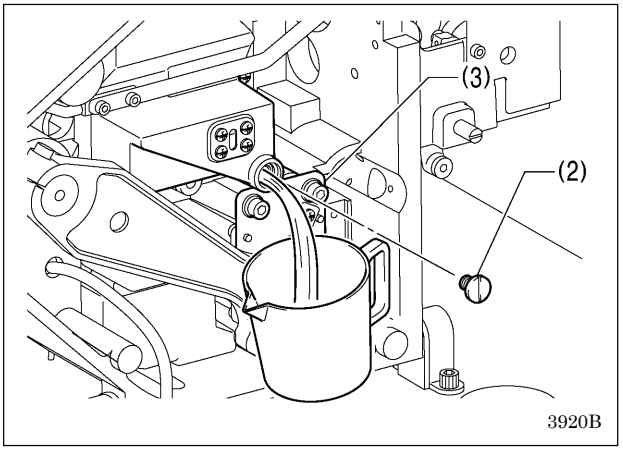

4. Have an oil pan ready, and then remove the screw (2).
* When the screw is removed, the oil will gush out. Make sure the oil pan is facing the correct way.

NOTE:
・Be careful not to get any lubricating oil on the X-feed motor (3). Otherwise it may cause problems with the operation of the pulse motor.
・Do not deliberately tilt the sewing machine in order to fully drain the oil. Injury may result.

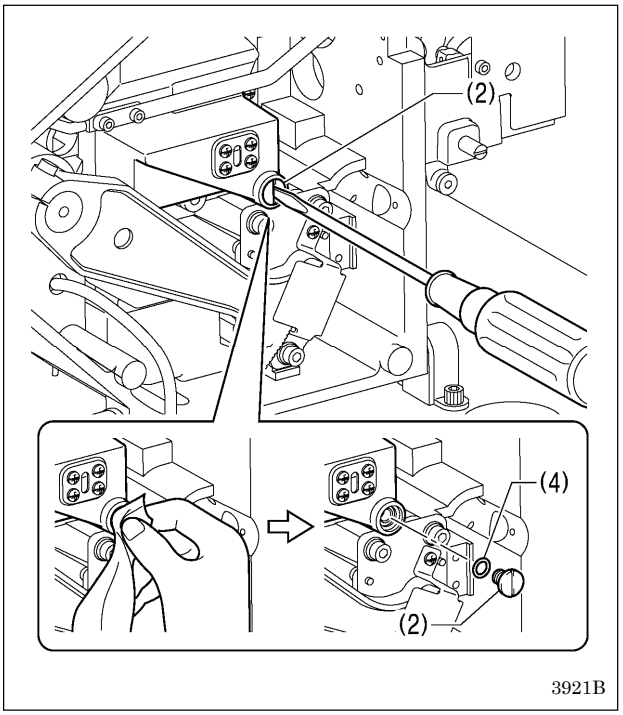

5. Install the screw (2).
* Clean around the installation area before installing.
* When installing the screw (2), check that the O-ring (4) is fitted onto it.

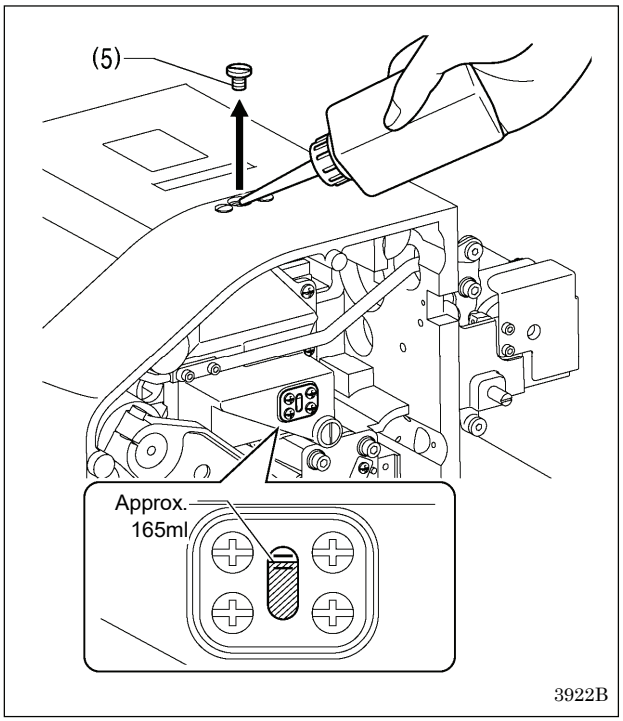

6. Remove the screw (5).
7. Pour in oil through the hole where the screw (5) was installed.

* Add approximately 165 ml of oil.

NOTE:

・Check that the oil level reaches in between the two reference lines in the oil gauge window. If the oil level is below the lower reference line, operating problems such as motor seizure may result.

・Do not allow the oil level to go past the top reference line. Oil leaks may occur during sewing machine operation.

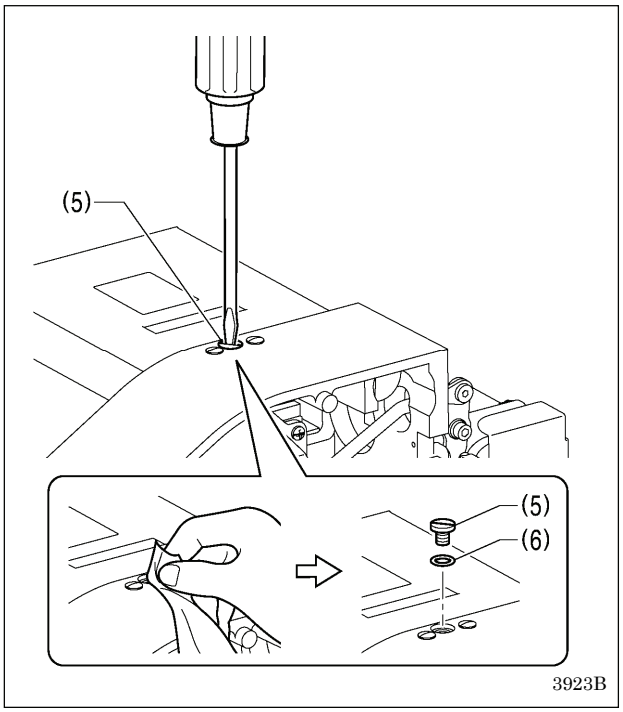

8. Install the screw (5).

* Clean around the installation area before installing.

* When installing the screw (5), check that the O-ring (6) is fitted onto it.

<Oil change counter initialization method>

After the oil has actually been changed, carry out the procedure below to clear the cumulative number of stitches before the oil was changed.

1

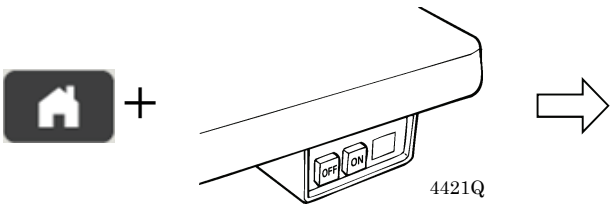

(While pressing the home key, turn on the power.)

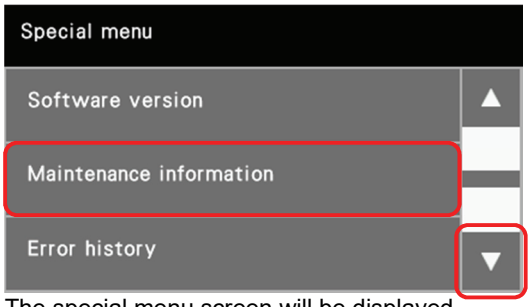

The special menu screen will be displayed.
Press the ▼ key to display "Maintenance information", and then touch "Maintenance information".

2

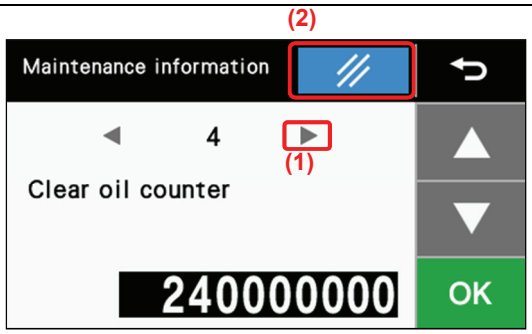

Press the ▶ key (1) to switch to clear oil counter mode.

When the reset key (2) is pressed, the oil counter will become zero and it will blink.

When the OK key OK is touched, the oil counter value will illuminate and the oil counter will be cleared. (This completes the clearing operation.)

3

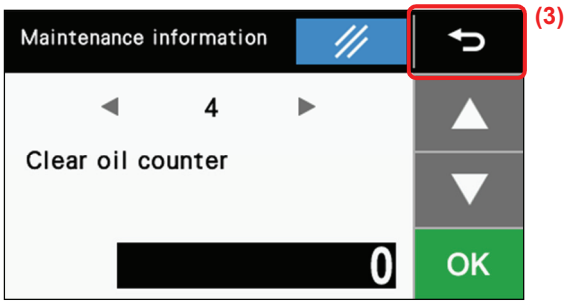

Press the return key (3) to return to the special menu.

Press the home key to return to the home screen.

9. STANDARD ADJUSTMENT

⚠ CAUTION

- Maintenance and inspection of the sewing machine should only be carried out by a qualified technician.
- Ask your Brother dealer or a qualified electrician to carry out any maintenance and inspection of the electrical system.
- If any safety devices have been removed, be absolutely sure to re-install them to their original positions and check that they operate correctly before using the machine.
- Secure the table so that it will not move when tilting back the machine head. If the table moves, it may crush your feet or cause other injuries.
- Use both hands to hold the machine head when tilting it back or returning it to its original position. If only one hand is used, the weight of the machine head may cause your hand to slip, and your hand may get caught.
- Turn off the power switch and disconnect the power cord from the wall outlet at the following times, otherwise the machine may operate if the foot switch is depressed by mistake, which could result in injury.
  - When carrying out inspection, adjustment and maintenance
  - When replacing consumable parts such as the hook and knives
- If the power switch needs to be left on when carrying out some adjustment, be extremely careful to observe all safety precautions.

9-1. Standard thread tension

Use	KE-430HX/HS				BE-438HX/HS
	Medium-weight materials (-03)	Knitted wear (-0K)	Light-weight materials (-01)	Heavy-weight materials (-05)	
Upper thread	#50 or equivalent	#60 or equivalent	#60 or equivalent	#30 or equivalent	#60 or equivalent
Lower thread	#50 or equivalent	#80 or equivalent	#60 or equivalent	#50 or equivalent	#60 or equivalent
Upper thread tension (N) [Tension value] *1	0.8 - 1.2 [80 - 120]*2			1.2 – 1.8 [70 - 130]*2	0.5 - 1.2 [50 - 150]*2
Lower thread tension (N)	0.2 - 0.3				0.2 - 0.3
Pre-tension (N)	0.05 - 0.3				0.1 - 0.4
Needle	DP x 5 #14	DP x 5 #9	DP x 5 #14	DP x 17NY #19	DP x 17NY #12

*1: For KE-430HX and BE-438HX.
*2: This is the tension value when the pretension is 0.05 N.

9-1-1. Upper and lower thread tension

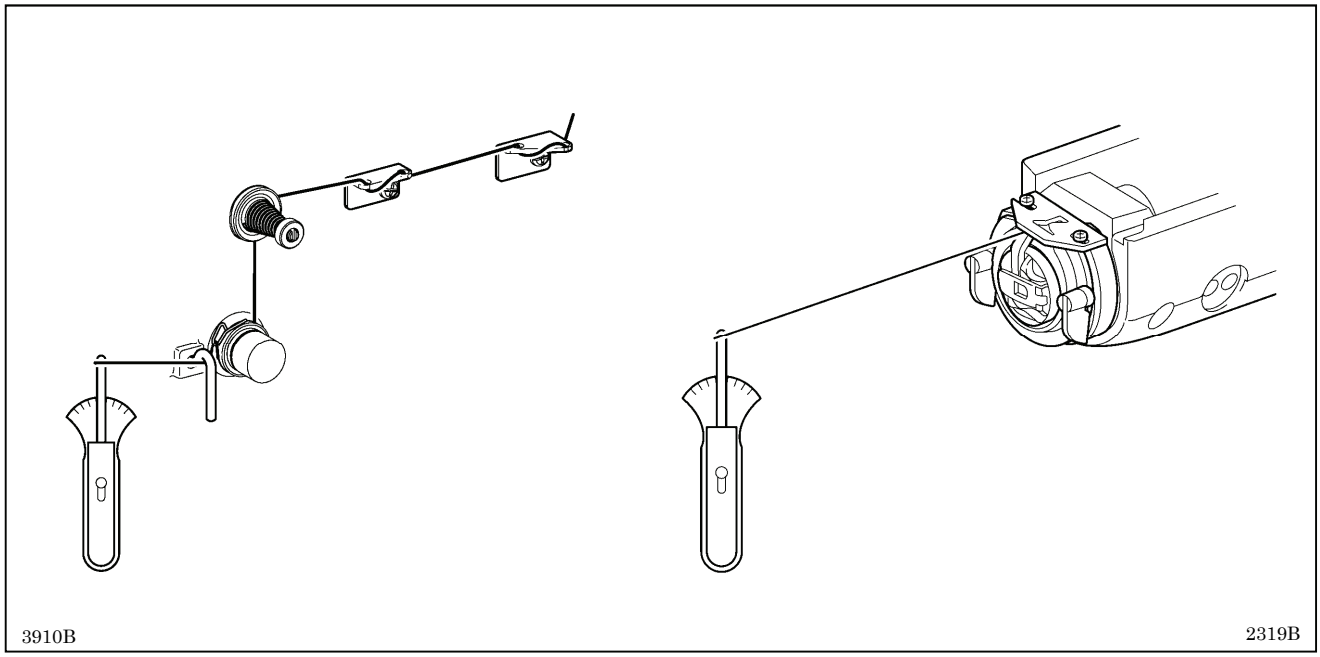

9-1-2. Thread take-up spring

Use	KE-430HX/HS				BE-438HX/HS
	Medium-weight materials (-03)	Knitted wear (-0K)	Light-weight materials (-01)	Heavy-weight materials (-05)	
Thread take-up spring height (mm)	6 - 11				6 - 11
Thread take-up spring tension (N)	0.2 - 0.4			0.6 - 1.0	0.15 – 0.35

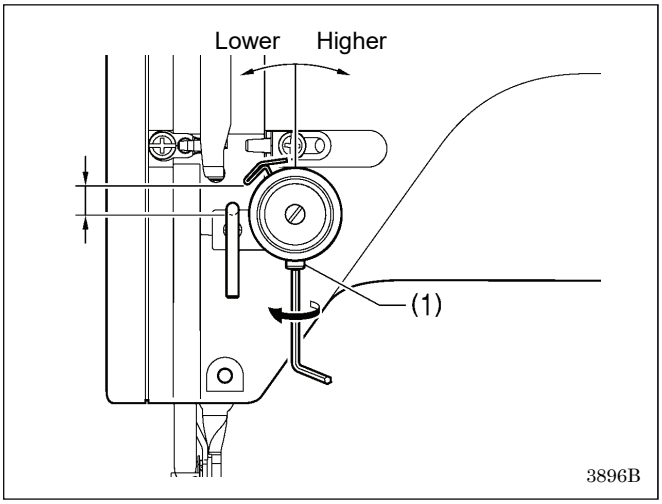

<Thread take-up spring height>

Loosen the set screw (1) and turn the tensioner body to adjust the thread take-up spring height.

<Thread take-up spring tension>

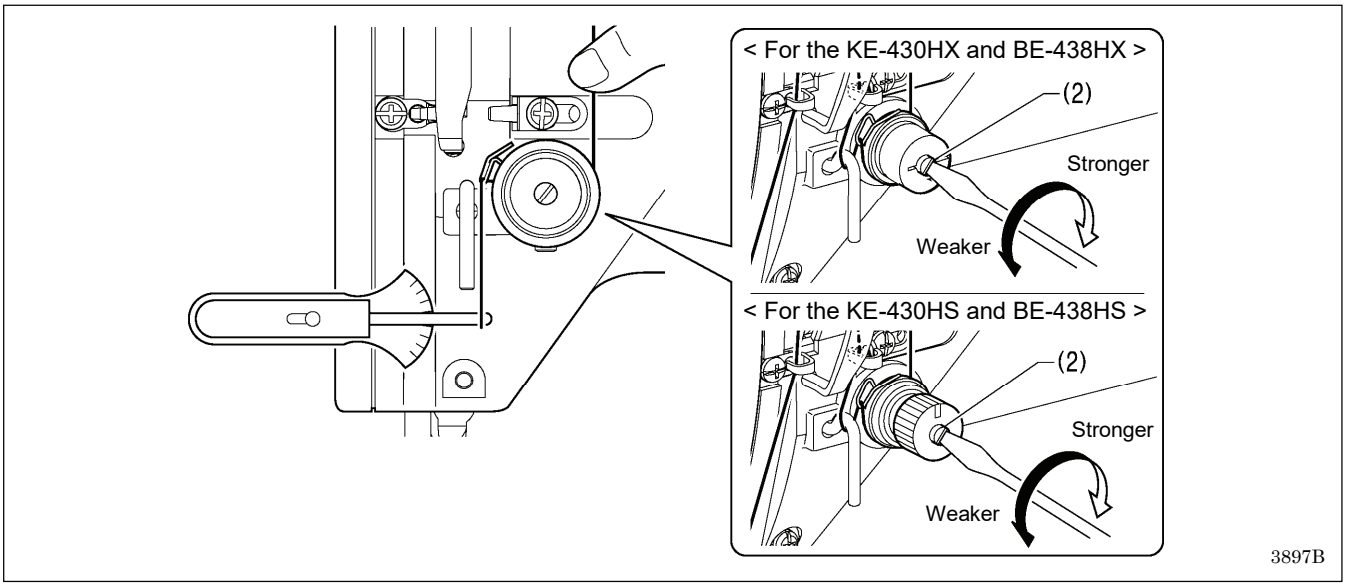

Adjust by turning the shaft (2) with a screwdriver.

* When the spring height (stroke) is great or the spring tension is insufficient, it may cause the thread end length to vary after thread trimming.

9-1-3. Arm thread guide C

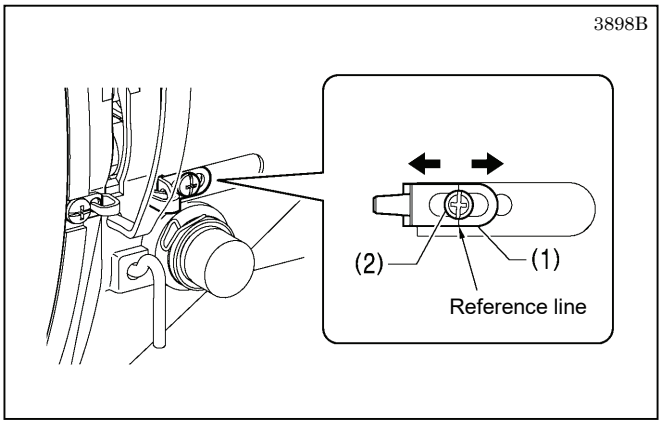

The standard position of arm thread guide C (1) is when the screw (2) is aligned with the position of the reference line.
To adjust the position, loosen the screw (2) and then move arm thread guide C (1).

- When sewing heavy-weight materials, move arm thread guide C (1) to the left. (The thread take-up amount will increase.)
- When sewing light-weight materials, move arm thread guide C (1) to the right. (The thread take-up amount will decrease.)

9-1-4. Needle bar bush thread guide D

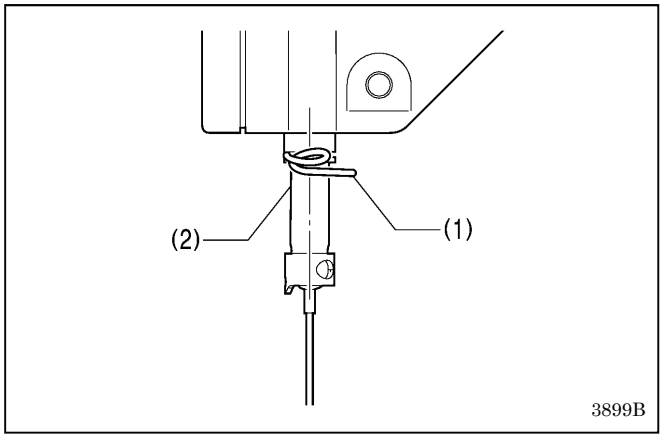

Check that needle bar bush thread guide D (1) is at the middle of the needle bar (2).

NOTE:
If needle bar bush thread guide D (1) is not in the correct position, the thread may pull out or skipped stitches may occur.

9-2. Adjusting the needle bar height

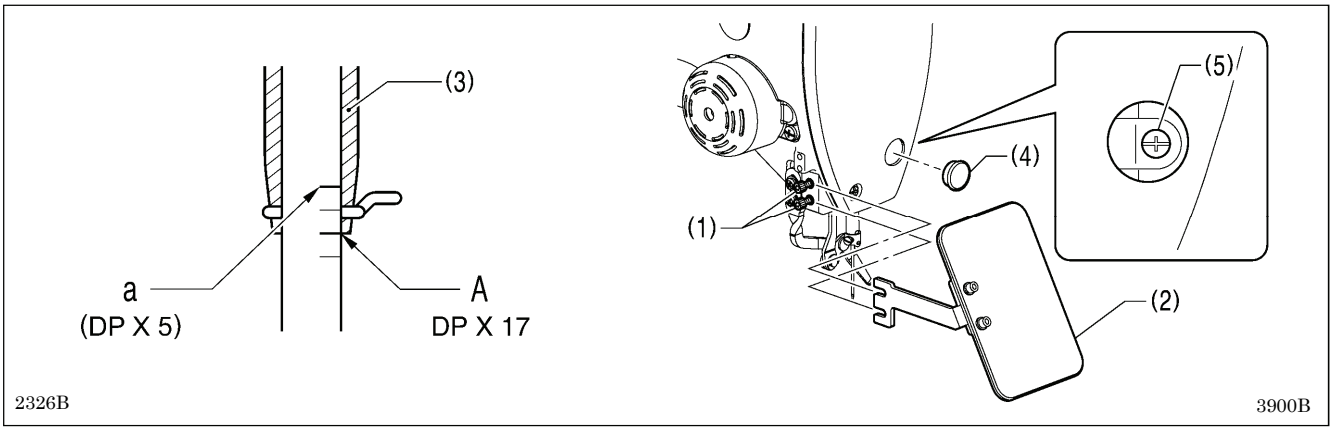

1. Loosen the two screws (1), and then remove the eye guard assembly (2).
2. Turn the pulley to move the needle bar to the lowest position. Then remove the rubber cap (4), loosen the screw (5) and then move the needle bar up or down to adjust so that the second reference line from the bottom of the needle bar (reference line A) is aligned with the lower edge of the needle bar bush (3).

* If using a DP x 5 needle, use the highest reference line (reference line a).

9-3. Adjusting the needle bar lift amount and the driver needle guard

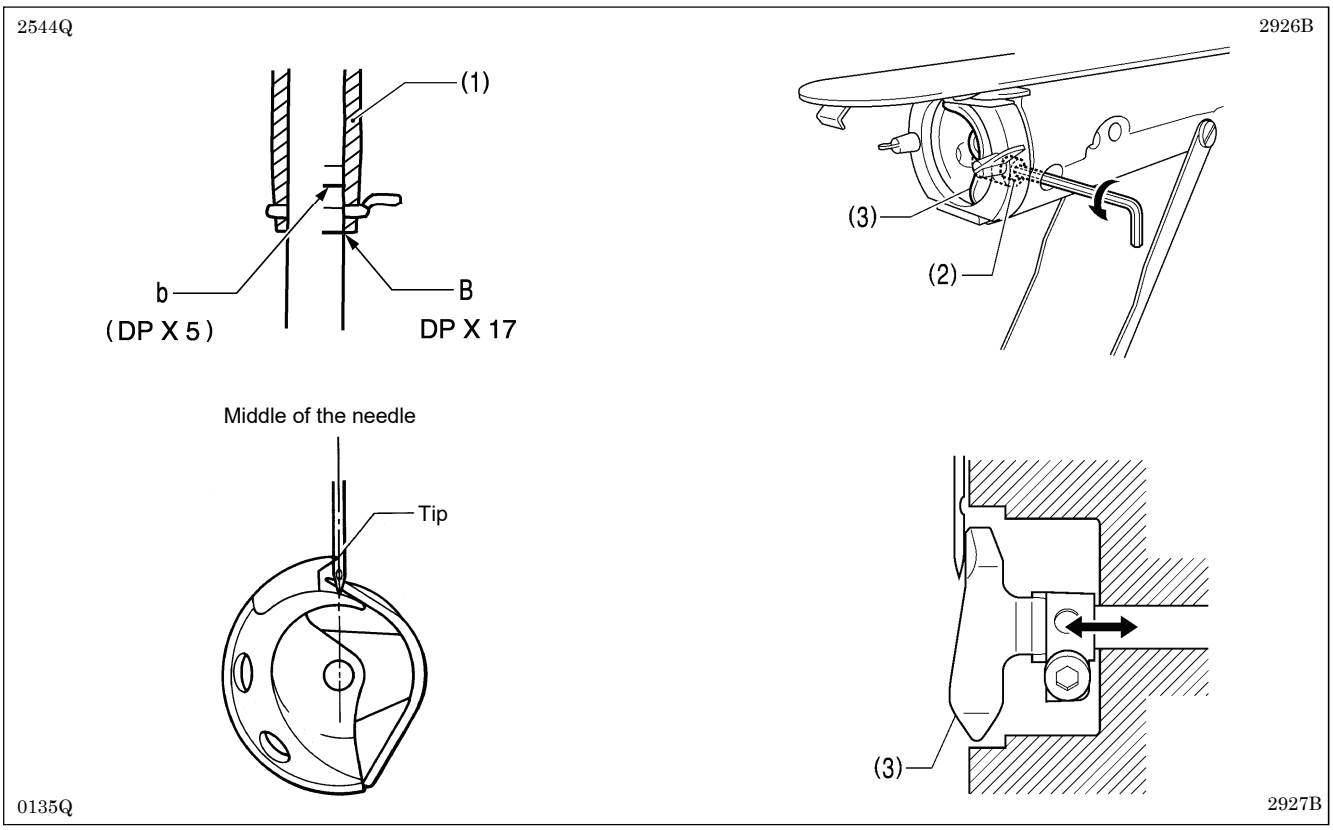

1. Turn the pulley in the direction of the arrow to raise the needle bar from the lowest position until the lowest reference line on the needle bar (reference line B) is aligned with the lower edge of the needle bar bush (1).
   * If using a DP x 5 needle, align with reference line b which is the second reference line from the top.
   NOTE:
   Check that the wiper and the needle do not touch when lowering the needle bar. If the wiper is in a position where it will touch the needle, move the wiper to the right by hand so that it does not touch the needle.
2. Loosen the bolt (2).
3. Move the driver (3) back and forth to adjust so that it is touching the needle when the tip of the shuttle hook is aligned with the middle of the needle, and then tighten the bolt (2).
   NOTE:
   If the needle contact pressure from the driver (3) is too great, skipped stitches may occur. On the other hand, if the driver (3) is not touching the needle, the tip of the shuttle hook will obstruct the needle, resulting in an excessively high amount of friction.

9-4. Adjusting the needle clearance

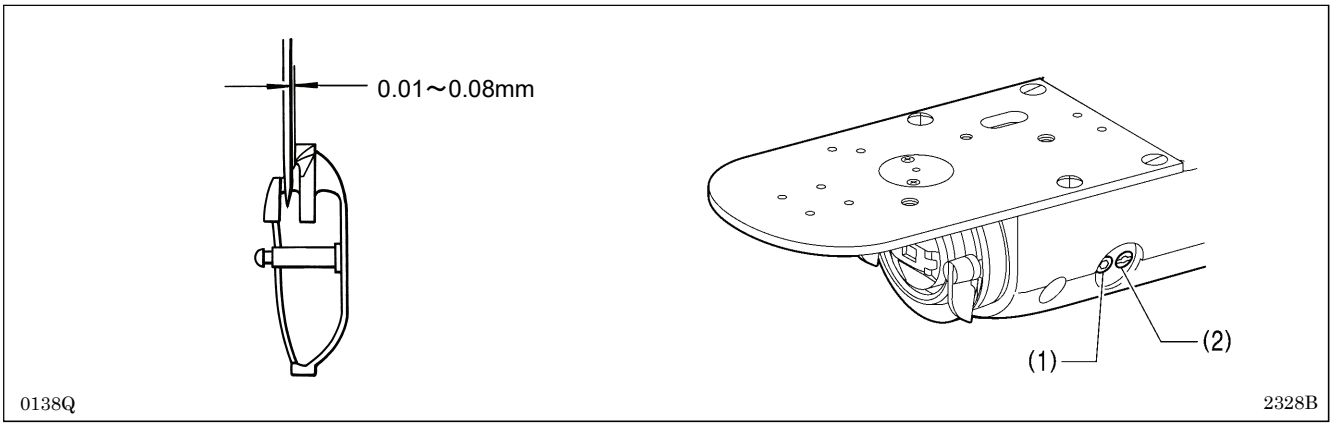

Turn the pulley in the direction of the arrow to align the tip of the shuttle hook with the needle center line. Then loosen the set screw (1) and turn the adjusting stud (2) to adjust so that the clearance between the needle and the tip of the shuttle hook is 0.01 - 0.08 mm.

9-5. Adjusting the shuttle race thread guide

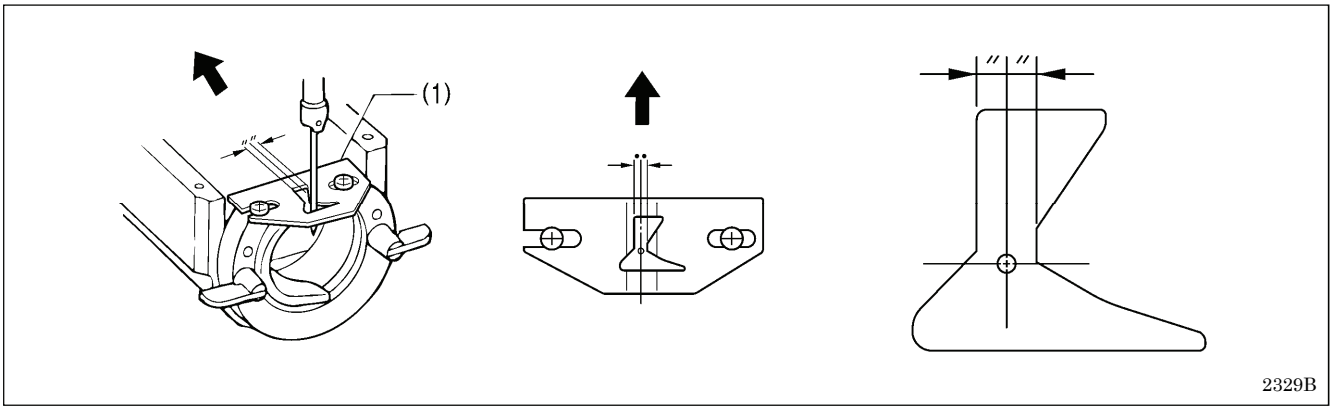

Install the shuttle race thread guide (1) by pushing it in the direction of the arrow so that the needle groove is aligned with the center of the needle plate hole.

NOTE:

If the shuttle race thread guide is in the wrong position, thread breakages, soiled thread or thread entanglements may occur.

The position of the shuttle race thread guide is adjusted at the time of shipment from the factory. It should not be changed if at all possible.

9-6. Hook lubrication amount

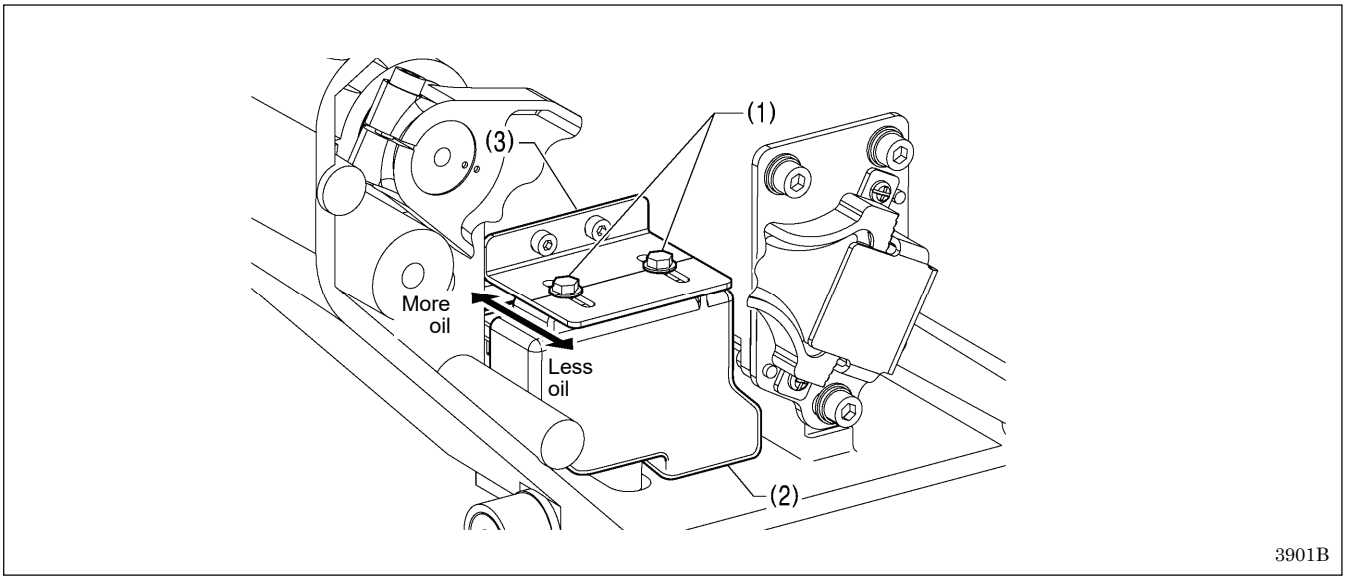

1. Tilt back the machine head.
2. Loosen the two bolts (1), and then adjust by moving the oil tank assembly (2) up or down.
   * The standard position is when the centers of the two bolts (1) are aligned with the reference line on the oil tank plate (3).

9-7. Replacing the movable knife and fixed knife

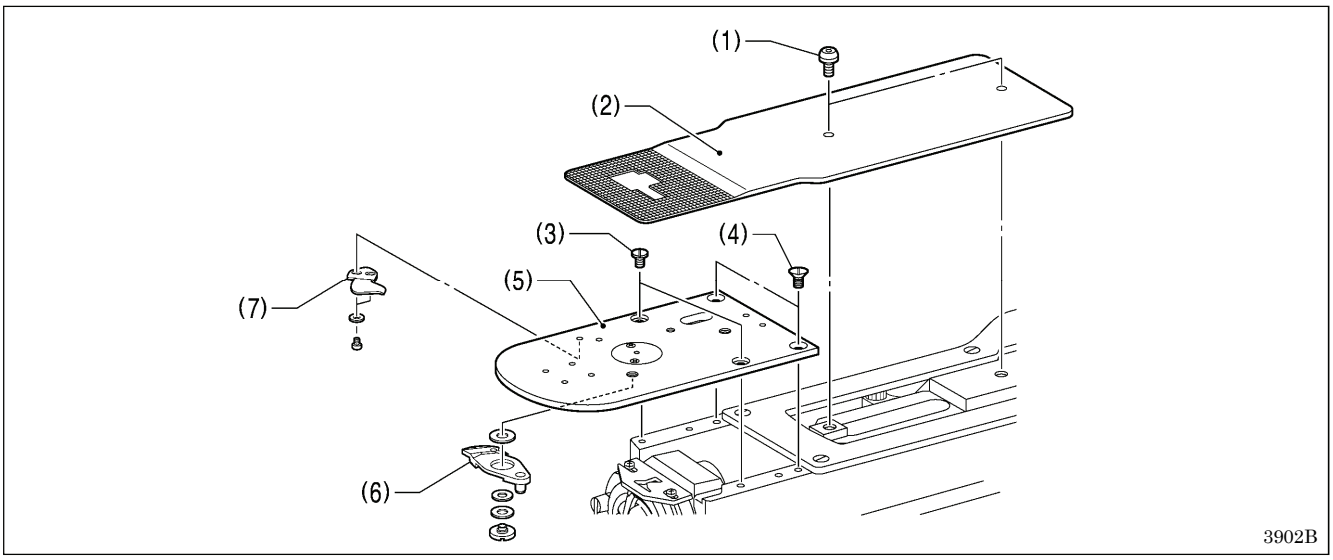

1. Open the shuttle race cover, remove the two screws (1), and then remove the feed plate (2).
2. Remove the two screws (3) and the two flat screws (4), and then remove the needle plate (5).
3. Remove the movable knife (6) and the fixed knife (7).

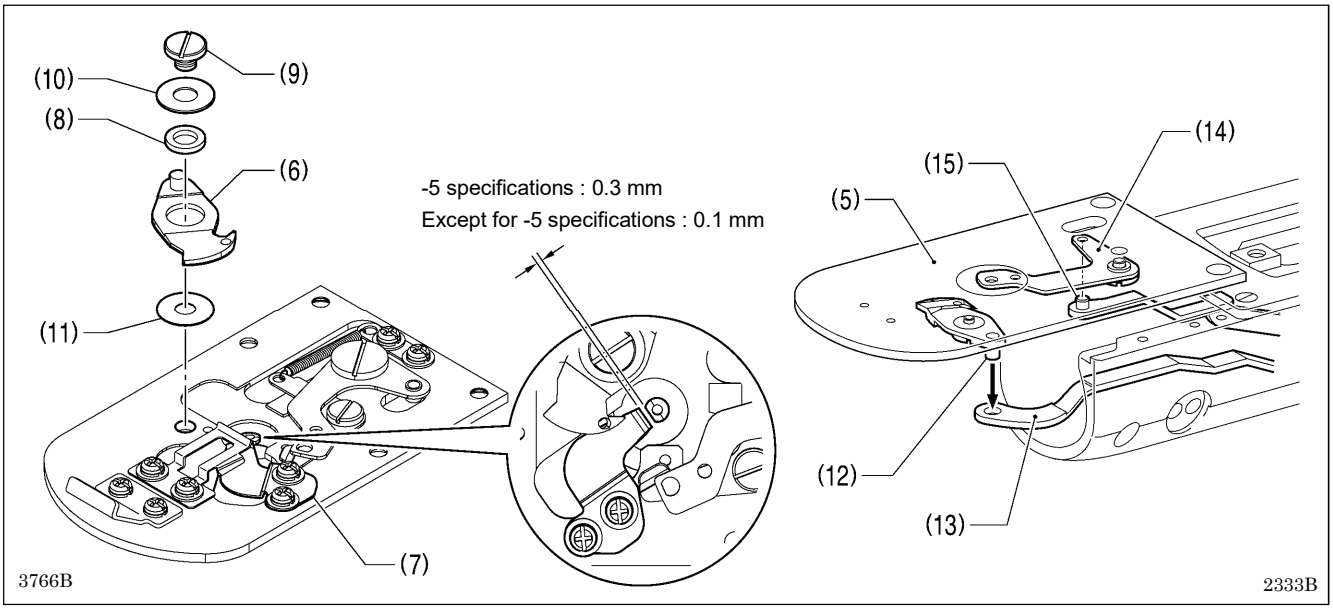

4. Install new fixed knife (7) in the position shown in the illustration.
5. Apply grease to the outside of the collar (8) and the shoulder screw (9), and then install the new movable knife (6) together with the thrust washer (10) and movable knife spacer (11).
6. Check that the movable knife (6) and the fixed knife (7) cut the thread cleanly.
7. Apply grease to the pin (12) of the movable knife, and then insert it into the hole in the movable knife connecting plate (13). Then, while placing the pin (15) of thread nipper connecting plate F into the hole in thread nipper D (14), install the needle plate (5).
8. Check that the center of the needle hole and the needle are aligned.

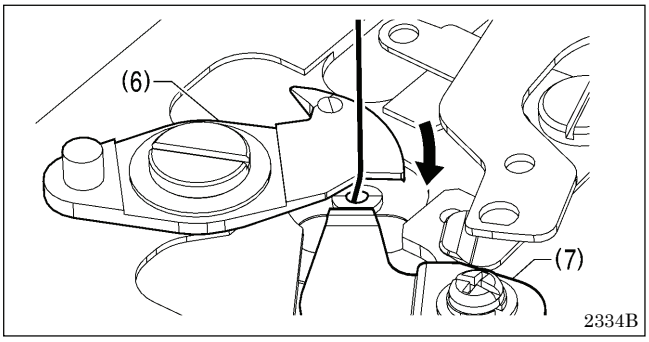

Select an accessory movable knife spacer (11) which allows the movable knife (6) to cross over the fixed knife (7) with a force that is as gentle as possible while still allowing the thread to be trimmed.

* Move the movable knife (6) as shown in the illustration and check that it trims the thread cleanly.

NOTE:

If the movable knife spacer (11) is too thick, it will not be possible to trim the thread.

9-8. Adjusting the work clamp lift amount (KE-430HX/HS)

Adjust so that the actual maximum lift amount for the work clamp is 17 mm above the top of the needle plate when the maximum work clamp height has been set to 17 mm using the operation panel.

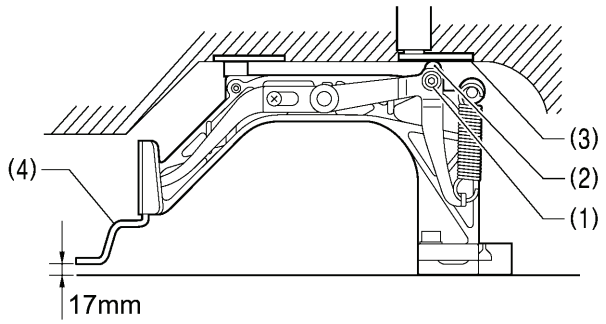

1. Loosen the bolt (1) and move the work clamp arm lever plate (2) up or down to adjust.
2. Apply grease to the bottom of the work clamp lifter plate (3), to the top of the work clamp arm lever plate (2) and to the sliding part of the work clamp (4) (grease is already applied at the time of shipment), and check that the movement becomes easier.

9-9. Adjusting the button clamp lift amount (BE-438HX/HS)

Adjust so that the actual maximum lift amount for the button clamp is 13 mm above the top of the needle plate when the maximum button clamp height has been set to 13 mm using the operation panel.

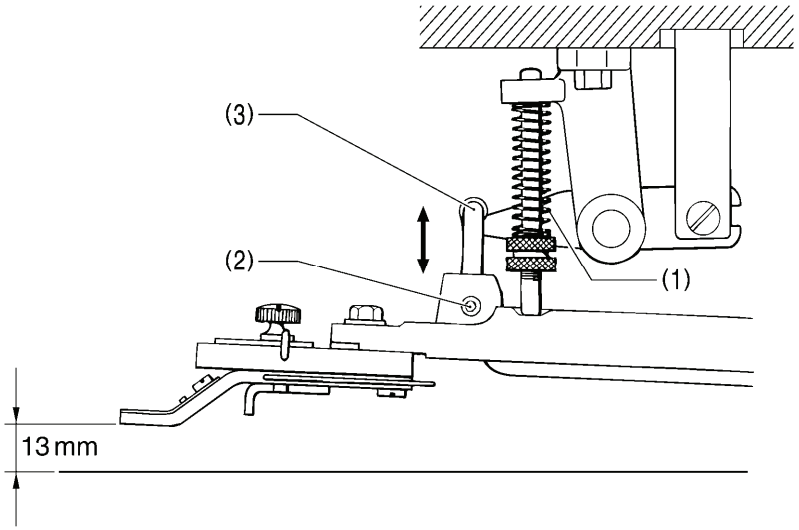

Remove the spring (1), loosen the set screw (2) and adjust the button clamp holder hook (3) by moving it up and down.
* If the button clamp lift amount is too large, the button clamp will not be raised.

9-10. Adjusting the holding pressure (BE-438HX/HS)

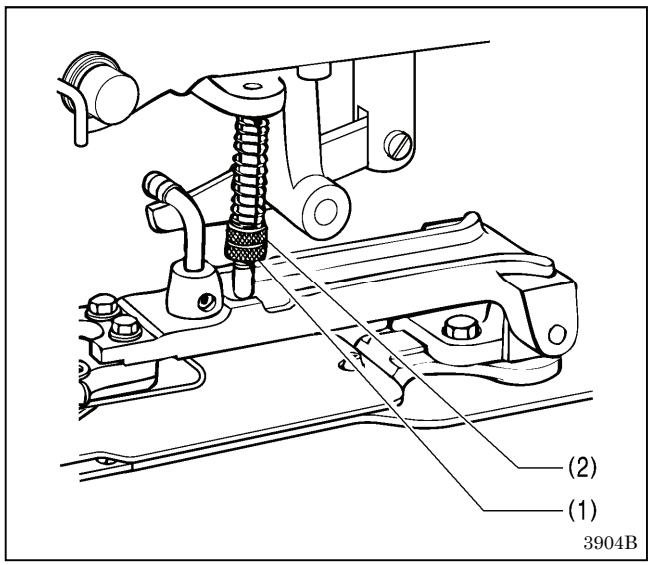

Loosen the nut (1) and turn the nut (2) to the point where it is just tight enough that the material will not slip out of place when it is slightly pulled (keep pressure as slight as possible).

9-11. Adjusting the position of the button clamp (BE-438HX/HS)

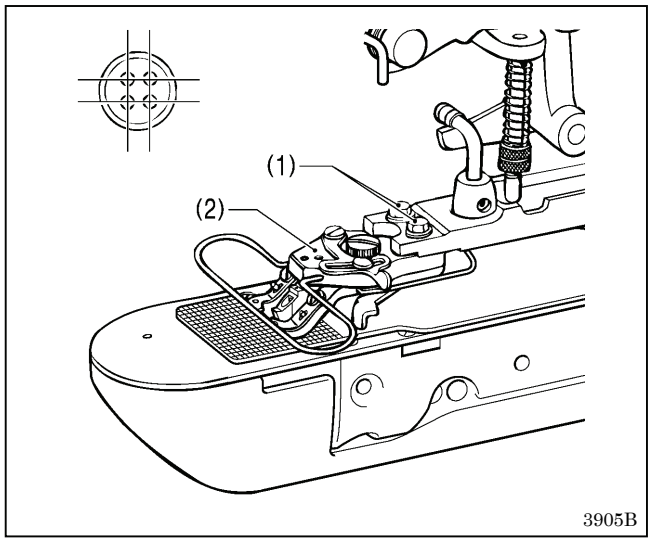

1. Loosen the two bolts (1) and adjust the button clamp base (2) by moving it.
2. Carry out test feeding to check that the needle will go through the button hole with no contact.

9-12. Adjusting the thread wiper

<Thread wiper height adjustment>

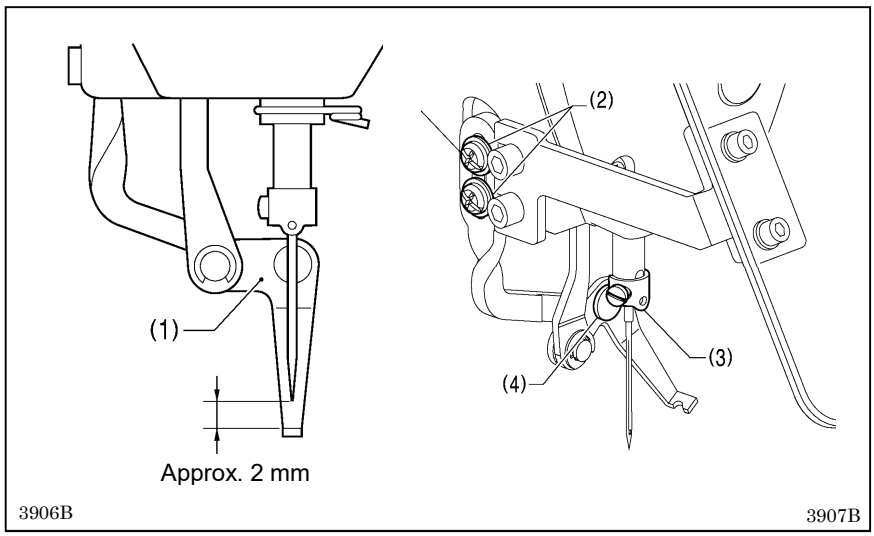

Loosen the two screws (2) and adjust the thread wiper (1) so that the clearance between the top of the thread wiper (1) and the needle point is approximately 2 mm when the thread wiper (1) is aligned with the center of the needle.

NOTE:
Check that the needle bar thread guide (3) and the thread wiper base shaft (4) are not touching at this time.

<Thread wiper racking width adjustment>

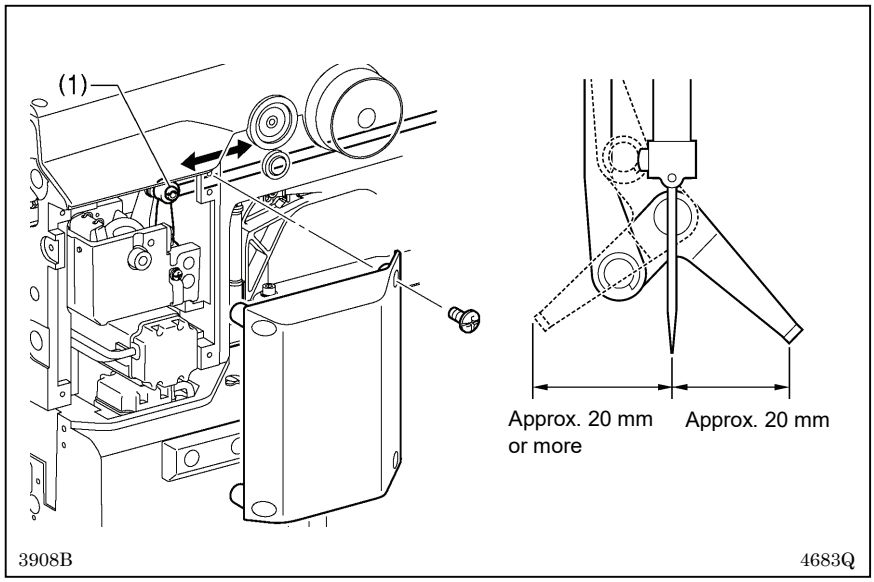

1. Remove the side cover.
2. Loosen the set screw (1) and adjust so that the distance from the thread wiper to the center of the needle is as shown in the illustration.

9-13. Checking the machine head switch

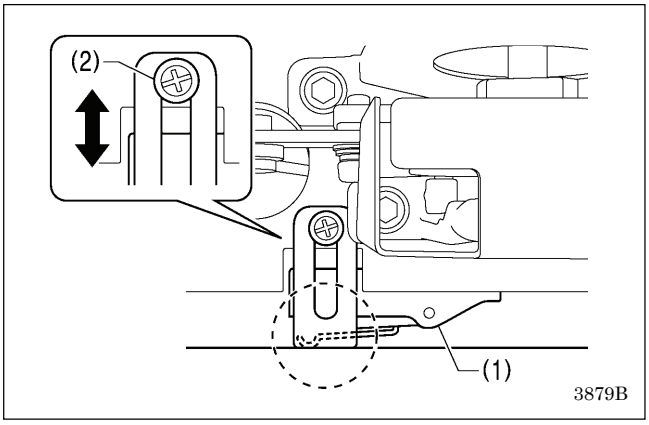

1. Turn on the power switch.
2. Check that no error numbers appear on the operation panel.

<If error “E050”, “E051” or “E055” is displayed>
If the machine head switch (1) is not turned on, error “E050”, “E051” or “E055” will occur.

Use the screw (2) to adjust the installation position of the machine head switch as shown in the illustration.

10. TABLE OF ERROR CODES

⚠ DANGER

Wait at least 5 minutes after turning off the power switch and disconnecting the power cord from the wall outlet before opening the face plate of the control box. Touching areas where high voltages are present can result in severe injury.

If a malfunction should occur with the sewing machine, a buzzer will sound and an error code will appear in the touch panel. Follow the remedy procedure to eliminate the cause of the problem.

Switch-related errors

Code	Cause and remedy
E010	The stop switch was pressed. Turn off the stop switch to clear the error.
E011	The stop switch was pressed. Press the reset key to clear the error. You can press the change stitch count key [▼] to move the work clamp so that you can continue sewing.
E012	The stop switch was pressed. Press the reset key to clear the error, and then depress the foot switch to the 2nd step to carry out home position detection.
E015	The stop switch is being pressed when the power was turned on, or there is a problem with the connection of the stop switch. Turn off the power, and then check that connector P15 on the main P.C. board is properly connected.
E016	Problem with the stop switch connection when the power was turned on. Turn off the power, and then check that connector P15 on the main P.C. board is properly connected.
E020	The start switch was pressed without lowering the work clamp. Release the start switch to clear the error.
E025	The start switch (2nd foot switch) is being pressed, or there is a problem with the connection of the start switch (foot switch). Turn off the power and check the foot switch.
E035	The work clamp switch (1st foot switch) is being pressed, or there is a problem with the connection of the work clamp switch (foot switch). Turn off the power and check the foot switch.
E050	Machine head tilting was detected after the power was turned on. Turn off the power, and then return the machine head to its original position. Check that connector P9 on the main P.C. board is properly connected.
E051	Machine head tilting was detected while the sewing machine was operating. Turn off the power, and then check that connector P9 on the main P.C. board is properly connected.
E055	Machine head tilting was detected when the power was turned on. Turn off the power, and then return the machine head to its original position. Check that connector P9 on the main P.C. board is properly connected.
E065	The operation panel key is being pressed or there is a problem with the switch. Turn off the power, and then check.

Main shaft-related errors

Code	Cause and remedy
E100	It is time to change the oil. Turn off the power, and then carry out the reset procedure.
E110	Needle up stop position error. Turn the pulley and adjust the stop position.
E111	Upper shaft did not stop at the needle up stop position when the sewing machine stopped. Turn off the power, and then check that there are no problems with the thread trimming mechanism and the main shaft motor mechanism.
E121	Thread trimming was not completed. Turn off the power, and then check if the cutting edges of the fixed knife and movable knife are damaged or worn.
E130	Main shaft motor stopped due to a problem, or synchronizer is faulty. Turn off the power, and then turn the machine pulley to check if the machine has locked up. Check that connector P5 on the power supply motor P.C. board and the 4-pin main shaft motor connector are properly connected.
E131	Synchronizer is not connected correctly. Turn off the power, and then check that connector P5 on the motor P.C. board is properly connected.
E132	Problem detected with main shaft motor operation. Turn off the power, and then check that connector P4 and P5 on the motor P.C. board are properly connected.
E133	Main shaft motor stopping position is incorrect. Turn off the power, and then check that connector P5 on the motor P.C. board is properly connected.
E150	Main shaft motor is overheating, or temperature sensor is faulty. Turn off the power, and then check that connector P5 on the motor P.C. board is properly connected. (When sewing data with a small number of stitches (15 stitches or less) is sewn repeatedly (short cycle operation), the main shaft motor may overheat and the “E150” error code may be generated.)

Feed mechanism-related errors

Code	Cause and remedy
E200	X feed motor home position cannot be detected. Problem with X feed motor or poor X encoder connection. Turn off the power, and then check that connector P2 on the main P.C. board is properly connected.
E201	X feed motor stopped abnormally. Turn off the power and check that there is no problem with the X feed direction.
E204	X feed motor stopped abnormally during sewing. Turn off the power and check that there is no problem with the X feed direction.
E205	X-feed motor stopped due to a problem while moving to the sewing start position. Turn off the power and check that there is no problem with the X feed direction.
E206	X feed motor stopped abnormally during test feeding. Turn off the power and check that there is no problem with the X feed direction.
E210	Y feed motor home position cannot be detected. Problem with Y feed motor or poor Y encoder connection. Turn off the power, and then check that connector P3 on the main P.C. board is properly connected.
E211	Y feed motor stopped abnormally. Turn off the power and check that there is no problem with the Y feed direction.
E214	Y feed motor stopped abnormally during sewing. Turn off the power and check that there is no problem with the Y feed direction.
E215	Y-feed motor stopped due to a problem while moving to the sewing start position. Turn off the power and check that there is no problem with the Y feed direction.
E216	Y feed motor stopped abnormally during test feeding. Turn off the power and check that there is no problem with the Y feed direction.

Work clamp-related errors

Code	Cause and remedy
E300	Work clamp home position cannot be detected. Problem with work clamp motor or poor work clamp encoder connection. Turn off the power, and then check that connector P6 on the main P.C. board is properly connected.
E301	Work clamp / button clamp raised or lowered position cannot be detected. Turn off the power, and then check that there is no problem with the vertical work clamp / button clamp position.
E330	Work clamp motor has overrun in the lowering direction.
E331	Work clamp motor has overrun in the raising direction.

Communication and memory-related errors

Code	Cause and remedy
E400	Communication error was detected with the main P.C. board when the power was turned on. Turn off the power, and then check that connector P5 on the motor P.C. board is properly connected.
E401	Communication error was detected with the motor P.C. board when the power was turned on. Turn off the power, and then check that connector on the main P.C. board and connector P23 on the motor P.C. board are properly connected.
E410	Communication error was detected between main P.C. board and panel P.C. board. Turn off the power, and then turn it back on again.
E411	Communication error was detected between main P.C. board and motor P.C. board. Turn off the power, and then turn it back on again.
E420	No USB memory is inserted. Press the reset key to clear the error.
E421	Data contents are incorrect and cannot be used, or no data. Press the reset key to clear the error. Check that data for this pattern number is present in the USB memory.
E422	Error occurred while reading from USB memory. Press the reset key to clear the error. Check the data in the USB memory.
E424	Insufficient space in USB memory. Press the reset key to clear the error. Use different USB memory.
E425	Error occurred while reading from USB memory. Press the reset key to clear the error. Use the specified type of USB memory. Check if the USB memory is write-protected and if it has enough free space.
E428	A pattern registered in a program has been erased. Press the reset key to clear the error. Re-register the program, or add the pattern.
E430	Flash memory of the main P.C. board is faulty. Turn off the power and change the main P.C. board.
E440	Data cannot be backed up to the main P.C. board. Turn off the power and change the main P.C. board.
E450	Model selection has not been loaded from the machine head memory. Turn off the power and check that connector P5 on the power supply motor P.C. board is properly connected.
E452	Machine head memory is not connected. Turn off the power, and then check that connector P4 on the main P.C. board is properly connected.
E474	Internal memory is full. Press the reset key to clear the error. Clear any unnecessary additional patterns and then secure a free space.

Data editing-related errors

Code	Cause and remedy
E500	The enlargement ratio setting caused the sewing data to extend outside the sewing area. Press the reset key to clear the error. Set the enlargement ratio again.
E502	The enlargement ratio caused the stitch length to exceed the maximum length of 12.7 mm. Press the reset key to clear the error. Set the enlargement ratio again.
E510	Error in pattern data. Press the reset key to clear the error. Re-read the pattern data from the USB memory, or recreate the pattern data.
E511	No end code has been input into pattern data. Press the reset key to clear the error. Recreate the pattern data containing the end code, or change the pattern number being read.
E512	Number of stitches exceeds allowed maximum. Press the reset key to clear the error. Change the number of the pattern being read.
E581	Memory switch file cannot be read correctly. Copy source model and copy destination model are incorrect. (Maybe the 430HX/HS is attempting to read data for the 438HX/HS.) Read data for the same sewing machine model.
E582	Memory switch versions do not match. Read data for the same version.
E583	Parameter versions do not match. Read data for the same version.

Device-related errors

Code	Cause and remedy
E600	Upper thread breakage has occurred. Thread the upper thread and then press the reset key to clear the error. Re-sewing is then possible.
E690	Thread trimmer pulse motor home position cannot be detected. Problem with thread trimmer pulse motor or poor thread nipper encoder connection. Turn off the power, and then clean underneath the needle plate to remove any dust and thread scraps. Check that connector on the main P.C. board is properly connected.
E692	Thread trimmer pulse motor stopped abnormally. Turn off the power, and then check.

P.C. board-related errors

Code	Cause and remedy
E700	Abnormal rise in power supply voltage. Turn off the power and check the input voltage.
E701	Abnormal rise in main shaft motor drive voltage. Turn off the power, and then check the voltage.
E705	Abnormal drop in power supply voltage. Turn off the power and check the input voltage.
E710	Abnormal current was detected in main shaft motor. Turn off the power, and then check if there are any problems with the sewing machine.
E711	Abnormal current was detected in pulse motor. Turn off the power, and then check if there are any problems with each motor.

Version updating-related errors

Code	Cause and remedy
E870	No panel control program is present. Write the panel control program.
E880	Version updating requests could not be received when power was turned on.
E881	Communication error occurred during version updating. Turn off the power, and then check.
E882	No USB memory is inserted. Turn off the power, and then check.
E883	No control program is present in the USB memory. Turn off the power, and then check.
E884	There is a problem with the control program. Write the correct file into the USB memory.
E885	Communication error within the USB memory occurred during main version updating. Turn off the power, and then check the connection of the USB memory.
E886	Fault is found in the version up file during main version updating. Turn off the power, and then repeat the version update procedure.
E887	Failed to save the version up file during main version updating. Turn off the power, and then repeat the version update procedure.

Others errors

Code	Cause and remedy
E990	There is an error with an optional part. Turn off the power, and then check if there are any problems with the optional parts.

If an error code that is not listed above appears or if carrying out the specified remedy does not solve the problem, contact the place of purchase.

11. TROUBLESHOOTING

• Please check the following points before calling for repairs or service.
• If the following remedies do not fix the problem, turn off the power switch and consult a qualified technician or the place of purchase.

⚠ DANGER

Wait at least 5 minutes after turning off the power switch and disconnecting the power cord from the wall outlet before opening the control box cover. Touching areas where high voltages are present can result in severe injury.

⚠ CAUTION

Turn off the power switch and disconnect the power cord before carrying out troubleshooting, otherwise the machine may operate if the foot switch is depressed by mistake, which could result in injury.

Problem	Cause	Remedy	Ref.
Work clamp does not rise. (KE-430HX/HS)	Work clamp operation is sluggish.	Grease the sliding part of the work clamp.	P. 76
	Too much friction between work clamp lifter plate and work clamp arm lever plate.	Grease the work clamp lifter plate and work clamp arm lever plate.	
	Work clamp is contacting thread wiper.	Adjust the position of the thread wiper.	P. 88
Button clamp does not rise. (BE-438HX/HS)	Work clamp is contacting thread wiper.	Adjust the position of the thread wiper.	P. 88
Work clamp lift amount is incorrect. (KE-430HX/HS)	Incorrect position of work clamp arm lever plate	Adjust the work clamp lift amount.	P. 87
Button clamp lift amount is incorrect. (BE-438HX/HS)	Incorrect position of button clamp holder hook.	Adjust the button clamp lift amount.	P. 87
Thread wiper does not operate correctly.	The thread wiper is obstructing the needle.	Adjust the height of the thread wiper.	P. 88
		Adjust the operating distance of the thread wiper.	P. 89
	Thread wiper position is incorrect.	Adjust the operating distance of the thread wiper.	P. 89
Lower thread winds to one side.	Height of bobbin winder tension assembly is incorrect.	Adjust the height of the bobbin winder tension assembly.	P. 32
Lower thread winding amount is incorrect.	Bobbin presser position is incorrect.	Adjust the position of the bobbin presser.	P. 32
Thread comes unthreaded.	Stitches being skipped at the sewing start.	Refer to “Skipped stitches occur”	P. 96
	Uneven needle thread.	Adjust the sub-tension.	P. 36
	Needle thread is too short.	Use a thread nipper device.	P. 38

Problem	Cause	Remedy	Ref.
Upper thread breaks.	Upper thread tension is too strong.	Adjust the upper thread tension.	P. 81
	Needle is installed incorrectly.	Install the needle correctly.	P. 31
	Thread is too thick for the needle.	Use the correct thread for the needle.	P. 36
	Thread take-up spring tension and height are incorrect.	Adjust the tension and height of the thread take-up spring.	P. 82
	Damaged or burred shuttle hook, needle hole plate or needle.	File smooth or replace the affected part.	
	Thread melting (synthetic thread)	Use the needle cooler.	P. 27
Lower thread breaks.	Lower thread tension is too strong.	Adjust the lower thread tension.	P. 81
	Corners of needle hole plate or bobbin case are damaged.	File smooth or replace the affected part.	
Skipped stitches occur.	Clearance between needle and tip of shuttle hook is too great.	Adjust the needle clearance.	P. 84
	Incorrect needle and shuttle hook timing.	Adjust the needle bar lift amount.	P. 84
	Driver is contacting needle more than is necessary.	Adjust the driver needle guard.	P. 84
	Needle is bent.	Replace the needle.	
	Needle is installed incorrectly.	Install the needle correctly.	P. 31
Needle breaks.	Needle is touching the shuttle hook.	Adjust the needle clearance.	P. 84
		Adjust the needle bar lift amount.	P. 84
	Needle is bent.	Replace the needle.	
	Needle is too thin.	Use the correct needle for the material.	P. 36
	Needle is striking the button. (BE-438HX/HS)	Refer to “5-11. Checking the sewing pattern”.	P. 57
Button breaks. (BE-438HX/HS)	Needle is striking the button.	Refer to “5-11. Checking the sewing pattern”.	P. 57

Problem	Cause	Remedy	Ref.
Upper thread is not trimmed.	Movable knife is blunt.	Replace the movable knife.	P. 86
	Fixed knife is blunt.	Sharpen or replace the fixed knife.	P. 86
	Movable knife does not pick up the thread.	Adjust the position of the shuttle race thread guide.	P. 85
		Adjust the needle bar lift amount.	P. 84
	The movable knife does not pick up the thread because of skipped stitches at the sewing end.	Refer to “Skipped stitches occur”.	P. 96
	Movable knife position is incorrect.	Adjust the position of the movable knife.	P. 86
	Sub-tension is too weak.	Turn the sub-tension nut to adjust the tension.	P. 36
Thread jamming.	Thread take-up spring tension and height are incorrect.	Adjust the tension and height of the thread take-up spring.	P. 82
	Incorrect needle and shuttle hook timing.	Adjust the needle bar lift amount.	P. 84
	Shuttle race thread guide is not separating the threads.	Adjust the position of the shuttle race thread guide.	P. 85
Poor seam finish on reverse side of material.	Shuttle race thread guide is separating the threads insufficiently.	Adjust the position of the shuttle race thread guide.	P. 85
	Upper thread is not properly tight.	Adjust the upper thread tension.	P. 81
	Uneven needle thread.	Adjust the sub-tension.	P. 36
	Needle thread is too long.	Adjust the sub-tension. **<When using the thread nipper device>** Turn the tension nut to adjust the upper thread trailing length to 35 – 38 mm.	P. 38
	Needle is striking the button. (BE-438HX/HS)	Refer to “5-11. Checking the sewing pattern”.	P. 57
Incorrect thread tightness.	Upper thread tension is too weak.	Adjust the upper thread tension.	P. 81
	Lower thread tension is too weak.	Adjust the lower thread tension.	P. 81
	Thread take-up spring tension and height are incorrect.	Adjust the tension and height of the thread take-up spring.	P. 82
Machine does not operate when power is turned on and foot switch is depressed.	Machine head switch does not work.	Check if the machine head switch cord is disconnected.	P. 22
		Adjust the position of the switching plate.	P. 30
		Replace the machine head switch if it is broken.	
The illumination becomes momentarily darker or flickers.	The illumination may become momentarily darker or flicker when the sewing machine starts or stops, depending on the power supply in the environment where the sewing machine is being used. This is not a sign of a malfunction.		

brother

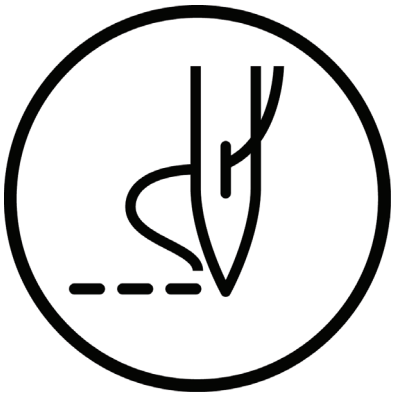

INSTRUCTION MANUAL

* Please note that the contents of this manual may differ slightly from the actual product purchased as a result of product improvements.

BROTHER INDUSTRIES, LTD. http://www.brother.com/

1-5, Kitajizoyama, Noda-cho, Kariya 448-0803, Japan. Phone : 81-566-95-0088

© 2017 Brother Industries, Ltd. All Rights Reserved.
This is the original instructions.

KE-430HX/KE-430HS, BE-438HX/BE-438HS
I7101175B E
2017.10.B (1)